Service-Anleitung
Service Manual
Instructions de Service

CT 7065

Technische Daten (typische Werte)	**Specifications** (typical values)	**Caractéristiques techniques** (valeurs types)	**Dati tecnici** (valori tipici)	
Empfangsbereiche FM (UKW) AM (MW) AM (LW)	**Reception wavebands** FM (VHF) AM (MW) AM (LW)	**Games de fréquences** FM (OC) AM (PO) AM (GO)	**Campi di ricezione** FM (OUC) AM (onde medie) AM (onde lunghe)	 87– 108 MHz 522–1611 kHz 153– 279 kHz
Empfindlichkeit (an 75 Ω) FM – Mono (26 dB) FM – Stereo (46 dB)	**Sensitivity** (at 75 Ω) FM – mono (26 dB) FM – stereo (46 dB)	**Sensibilité** (à 75 ohms) FM – Mono (26 dB) FM – Stéréo (46 dB)	**Sensibilità** (su 75 ohm) FM – mono (26 dB) FM – stereo (46 dB)	 0,9 µV 30 µV
Trennschärfe FM stat./dyn.	**FM selectivity** stat./dyn.	**Sélectivité** FM stat./dyn.	**Selettività** FM stat./din.	80/70 dB
Geräuschspannungsabstand	**Signal/noise ratio**	**Rapport signal/bruit**	**Rapporto segnale disturbo**	70 dB
Netzspannung Model Europa Model USA/Kanada	**Mains voltage** European model US/Canadian model	**Voltage secteur** Modèle Europe Modèle USA/Canada	**Tensione di rete** modello Europa modello Stati Uniti/Canada	 230 V/50 Hz 120 V/60 Hz
Maße (Breite × Höhe × Tiefe)	**Dimensions** (width × height × depth)	**Dimensions** (largeur × hauteur × profondeur)	**Dimensioni** (larghezza × altezza × profondità)	 440 × 82 × 245 mm

Dual GmbH · Postfach 1144 · 7742 St. Georgen/Schwarzwald

921 639 1191

Copyright by Dual

Abgleichanleitung

Signalquelle	Einstellung Gerät	Einstellung Signalquelle	Meßgerät Anschluß	Abgleichposition	Abgleich, Bemerkung
FM-Oszillator					
	108 MHz		DC Voltmeter an TP 1	L 16	8,3 V DC ± 0,2 V
	87,5 MHz				Kontrolle: 2,0–2,5 V DC
FM–ZF, Vorkreis					
FM-Meßsender an 75 Ohm Antenneneingang	Senderfreie Frequenz ca. 98 MHz	0–1 mV Hub ± 40 kHz Mod. 1 kHz ca. 98 MHz auf Deckung	Klirrfaktormeßbrücke Oszilloskop an NF-Ausgang	T 101	NF-Maximum
				T 102	
				T 103	NF und Klirrfaktor Minimum
	90 MHz	ca. 90 MHz auf Deckung		L 1/L 2, L 3/L 4, L 5	NF-Maximum
	105 MHz	ca. 105 MHz auf Deckung		TC 1, TC 2, TC 3	
				Vorkreisabgleich wiederholen	
FM–ZF (Feinabgleich)					
Antenne an 75 Ohm Antenneneingang	Starken FM-Sender auf seiner Sollfrequenz empfangen		DC-Voltmeter an: TP 2–TP 3	T 103	DC-Maximum und DC-Minimum ermitteln
				T 103	Spannungsmitte einstellen
				T 102	0 V ± 1 mV DC
				Abgleich wiederholen	
Pilotfrequenz 76 kHz, Kanaltrennung					
FM-Meßsender an 75 Ohm Antenneneingang	Senderfreie Frequenz ca. 98 MHz HI-Blend-Taste: Aus	ca. 98 MHz auf Deckung Hub ± 40 kHz, Mod. 1 kHz 1–2 mV, ohne Pilotton	Frequenzzähler an TP 5	VR 301	76 kHz ± 50 Hz
		mit 19 kHz Pilot	NF-Voltmeter, Oszilloskop an NF-Ausgang	VR 302	Maximale Kanaltrennung
Unterdrückung Pilottonreste (19 kHz)					
FM-Meßsender an 75 Ohm Antenneneingang	Senderfreie Frequenz ca. 98 MHz	Senderfreie Frequenz ca. 98 MHz auf Deckung 1–2 mV, 19 kHz, Pilot ein	NF-Voltmeter Oszilloskop an NF-Ausgang	T 302 (l.K)	Minimum
				T 301 (r.K)	
Suchlaufschwelle, FM-Signalanzeige					
FM-Meßsender an 75 Ohm Antenneneingang	Senderfreie Frequenz ca. 98 MHz	ca. 98 MHz auf Deckung Hub ± 40 kHz, Mod 1 kHz 10 µV	Kontrolle am Display	VR 101	„TUNED" Anzeige muß aufleuchten
				VR 102	Achter Signalbalken muß aufleuchten
AM-Oszillator					
	522 kHz		DC-Voltmeter an TP 1	T 201	0,65 V DC ± 0,05 V
	1611 kHz			TC 203	9,0 V DC ± 0,4 V
	153 kHz			T 202	1,6 V DC ± 0,05 V
	279 kHz			TC 204	5,4 V DC ± 0,4 V
AM–ZF, Vorkreis					
AM-Meßsender an 75 Ohm Antenneneingang	999 kHz	20 µV–1 mV, 1 kHz, Mod. 30 % 999 kHz	NF-Voltmeter Oszilloskop an NF-Ausgang	T 203, T 204	Maximum
	594 kHz	594 kHz		MW Ferritantenne	
	1404 kHz	1404 kHz		TC 201	
	162 kHz	162 kHz		LW Ferritantenne	
	252 kHz	252 kHz		TC 202	
AM-Signalanzeige					
AM-Meßsender an 75 Ohm Antenneneingang	999 kHz	100 µV, 1 kHz Mod. 30 % 999 kHz	Kontrolle am Display	VR 201	Achter Signalbalken muß aufleuchten

Tuning Instructions

Signal source	Equipment setting	Signal source setting	Connection of measuring instrument	Item to be tuned	Tuning, Remarks
FM oscillator					
	108 MHz		DC voltmeter to TP 1	L 16	8.3 V DC ± 0.2 V
	87.5 MHz				Check: 2.0 - 2.5 V DC
FM IF, input circuit					
FM signal generator to 75-ohm antenna input	Frequency without transmitters approx. 98 MHz	0 - 1 mV, Shift ± 40 kHz, Mod. 1 kHz, Tune to approx. 98 MHz	Harmonic detector oscilloscope to AF output	T 101	AF maximum
				T 102	
				T 103	AF and harmonic distortion minimum
	90 MHz	Tune to approx. 90 MHz		L 1/L 2, L 3/L 4, L 5	AF maximum
	105 MHz	Tune to approx. 105 MHz		TC 1, TC 2, TC 3	
				Repeat input-circuit tuning	
FM IF (fine tuning)					
Antenna to 75-ohm antenna input	Receive strong FM transmitter at its nominal frequency		DC voltmeter to: TP 2 - TP 3	T 103	Determine DC maximum and DC minimum
				T 103	Adjust power mean
				T 102	0 V ± 1 mV DC
				Repeat tuning	
Pilot frequency 76 kHz, channel separation					
FM signal generator to 75-ohm antenna input	Frequency without transmitters approx. 98 MHz Waveguide shutter key: OFF	Tune to approx. 98 MHz, Shift ± 40 kHz, Mod. 1 kHz, 1 - 2 mV, without pilot tone	Frequency counter to TP 5	VR 301	76 kHz ± 50 Hz
		with 19-kHz pilot	AF voltmeter, oscilloscope to AF output	VR 302	Maximum channel separation
Suppression of residual pilot frequencies (19 kHz)					
FM signal generator to 75-ohm antenna input	Frequency without transmitters approx. 98 MHz	Frequency without transmitters Tune to approx. 98 MHz 1 - 2 mV, 19-kHz pilot ON	AF voltmeter, oscilloscope to AF output	T 302 (left channel)	Minimum
				T 301 (right channel)	
Search threshold, FM signal indicator					
FM signal generator to 75-ohm antenna input	Frequency without transmitters approx. 98 MHz	Tune to approx. 98 MHz, Shift ± 40 kHz, Mod. 1 kHz 10 µV	Check the display	VR 101	"TUNED" display must light up
				VR 102	Eighth signal bar must light up
AM oscillator					
	522 kHz		DC voltmeter to TP 1	T 201	0.65 V DC ± 0.05 V
	1611 kHz			TC 203	9.0 V DC ± 0.4 V
	153 kHz			T 202	1.6 V DC ± 0.05 V
	279 kHz			TC 204	5.4 V DC ± 0.4 V
AM IF, input circuit					
AM signal generator to 75-ohm antenna input	999 kHz	20 µV - 1 mV, 1 kHz Mod. 30% 999 kHz	AT voltmeter, oscilloscope to AF output	T 203, T 204	Maximum
	594 kHz	594 kHz		AM ferrite-rod antenna	
	1404 kHz	1404 kHz		TC 201	
	162 kHz	162 kHz		LW ferrite-rod antenna	
	252 kHz	252 kHz		TC 202	
AM signal indicator					
AM signal generator to 75-ohm antenna input	999 kHz	100 µV, 1 kHz Mod. 30% 999 kHz	Check the display	VR 201	Eighth signal bar must light up

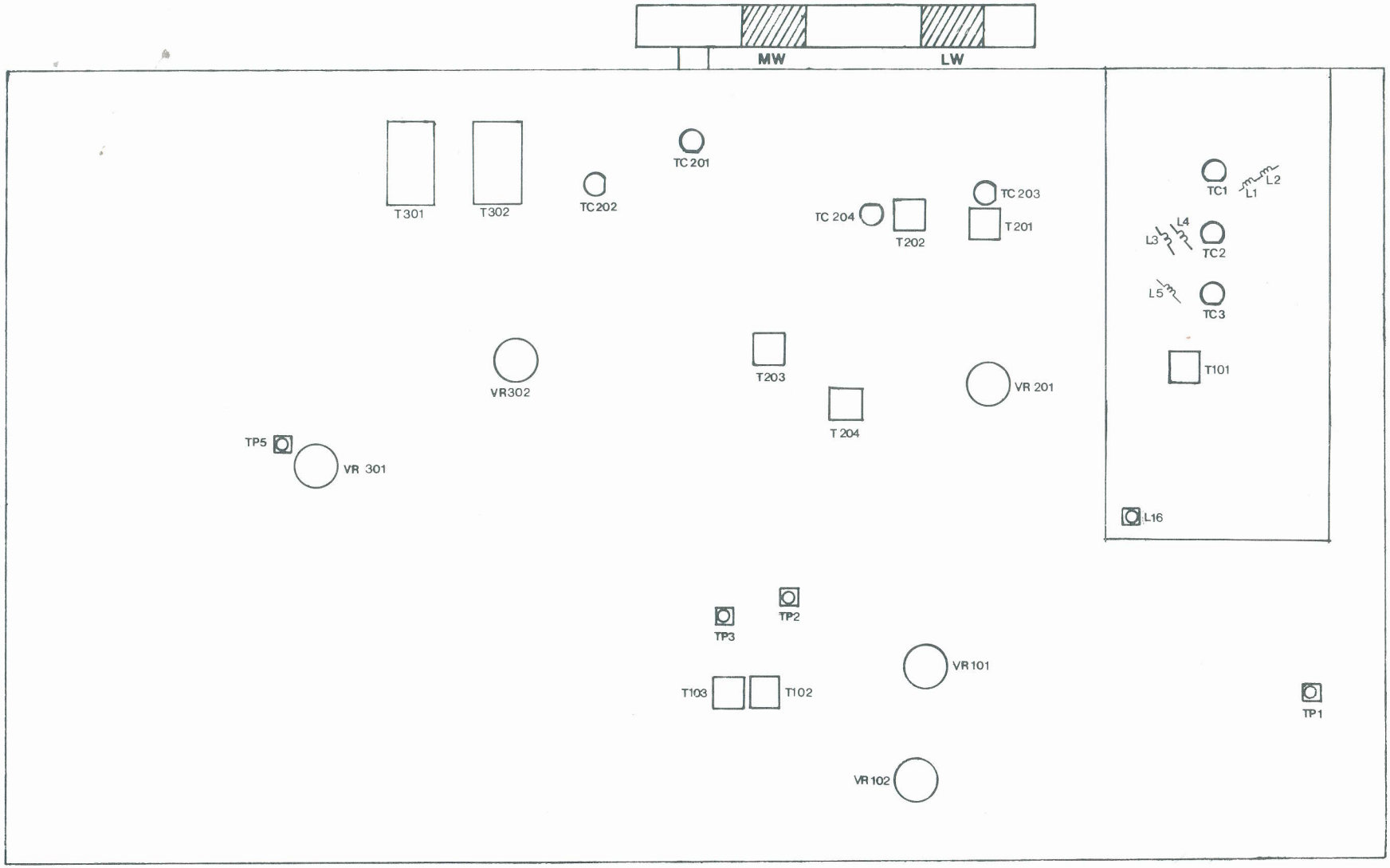
MW
LW
T301
T302
TC202
TC201
TC204
T202
TC203
T201
TC1
L1
L2
L3
L4
TC2
L5
TC3
T101
VR302
T203
VR 201
T204
TP5
VR 301
L16
TP3
TP2
VR101
T103
T102
TP1
VR102

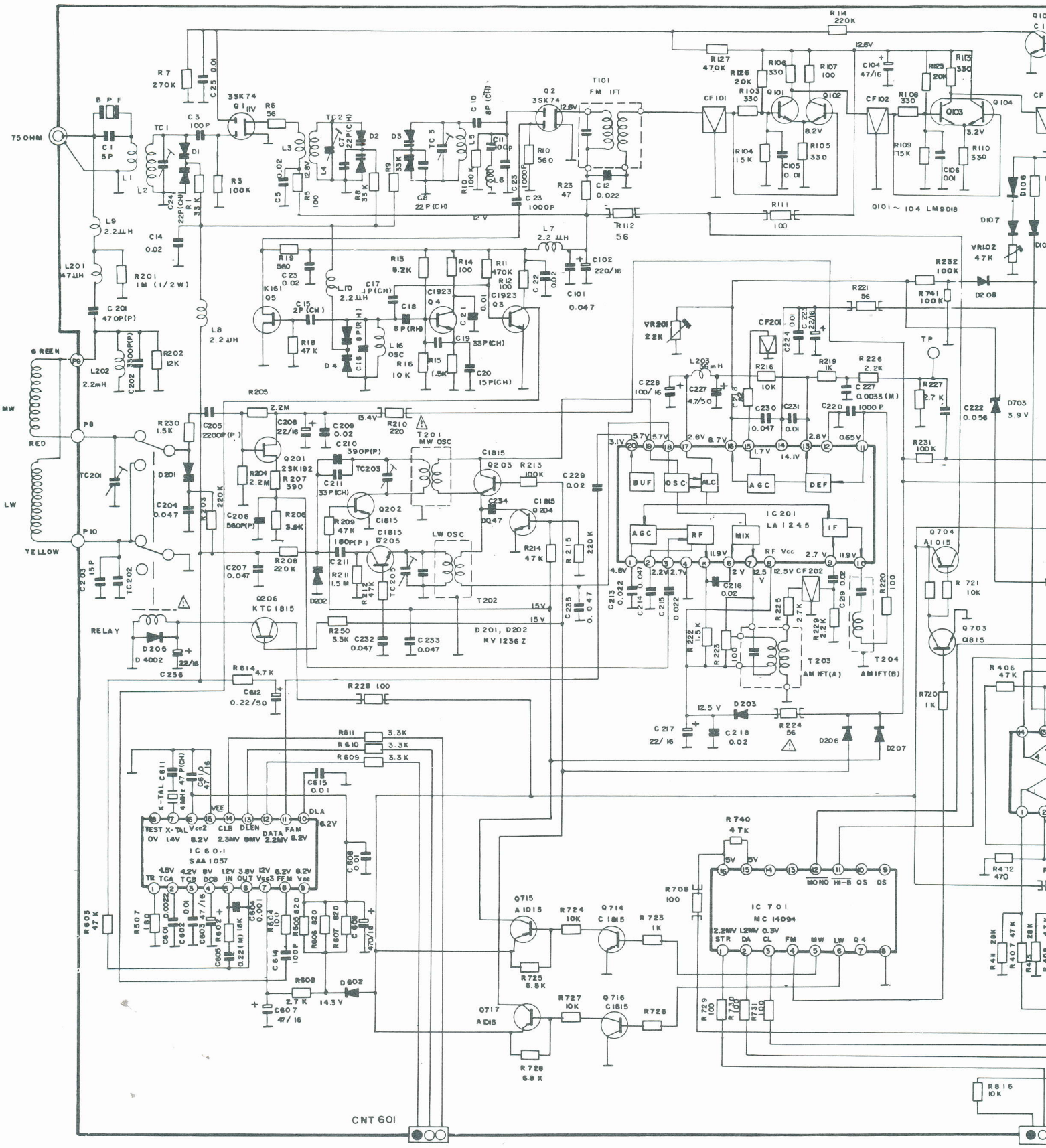

75 OHM
GREEN
MW
RED
LW
YELLOW
RELAY
CNT 601
IC 601
SAA 1057
IC 201
LA 1245
IC 701
MC 14094
Q101 ~ 104 LM9018
T101
FM IFT
T201
MW OSC
T202
LW OSC
T203
AM IFT(A)
T204
AM IFT(B)
D201, D202
KV 1236 Z
Q206
KTC 1815
Q201
2SK192
Q202
C1815
Q203
Q204
Q205
Q101
Q102
Q103
Q104
Q704
A1015
Q703
C1815
Q715
A1015
Q714
C1815
Q717
A1015
Q716
C1815
Q1
3SK74
Q2
3SK74
Q3
C1923
Q4
C1923
Q5
K161
CF101
CF102
CF201
CF202
BUF
OSC
ALC
AGC
DEF
RF
MIX
IF
TP

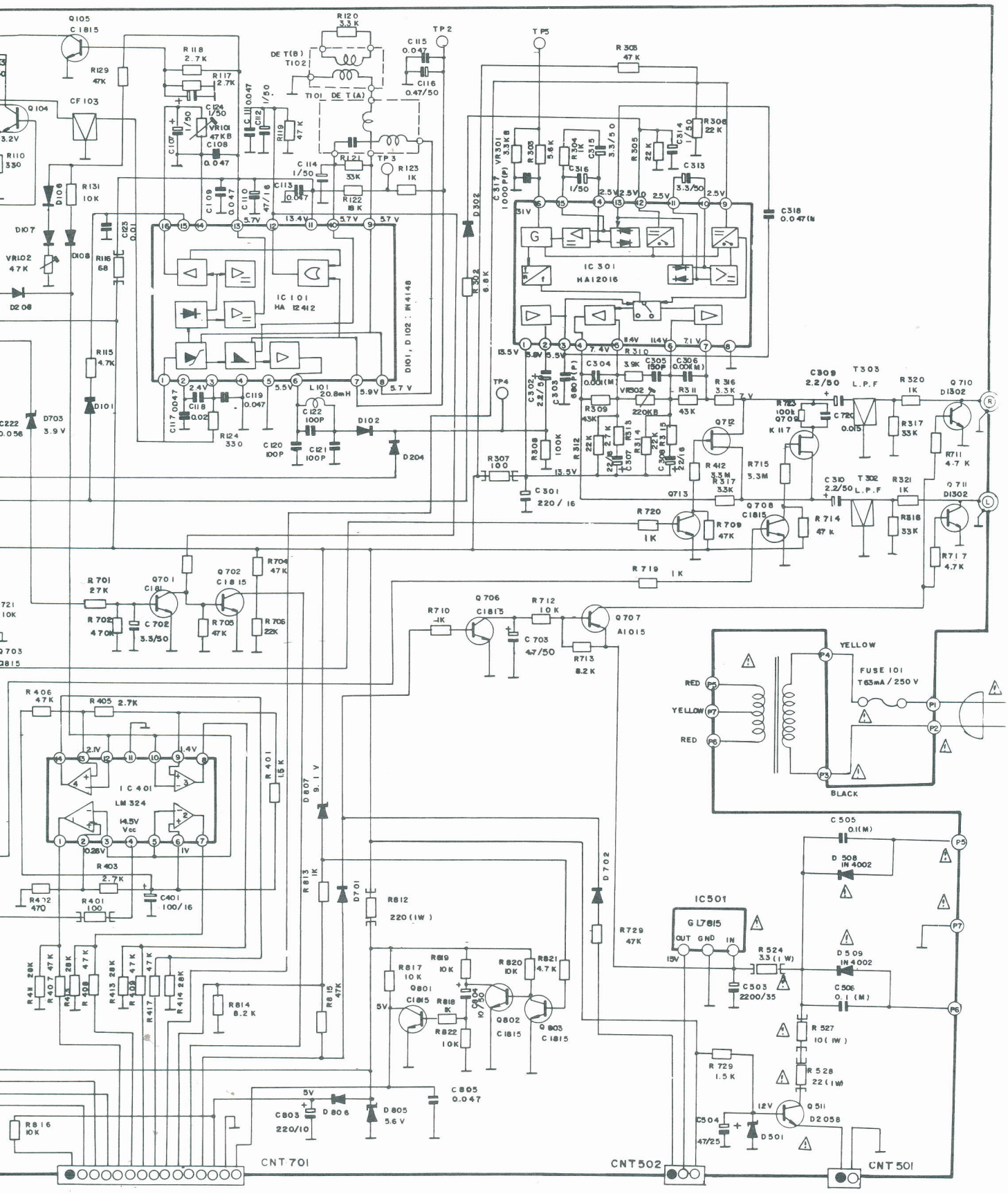
IC 101
HA 12412
IC 301
HA12016
IC 401
LM 324
IC501
GL7815
FUSE 101
T63mA / 250 V
YELLOW
RED
BLACK
CNT 701
CNT502
CNT 501

Grundplatte
Main P.C.P.

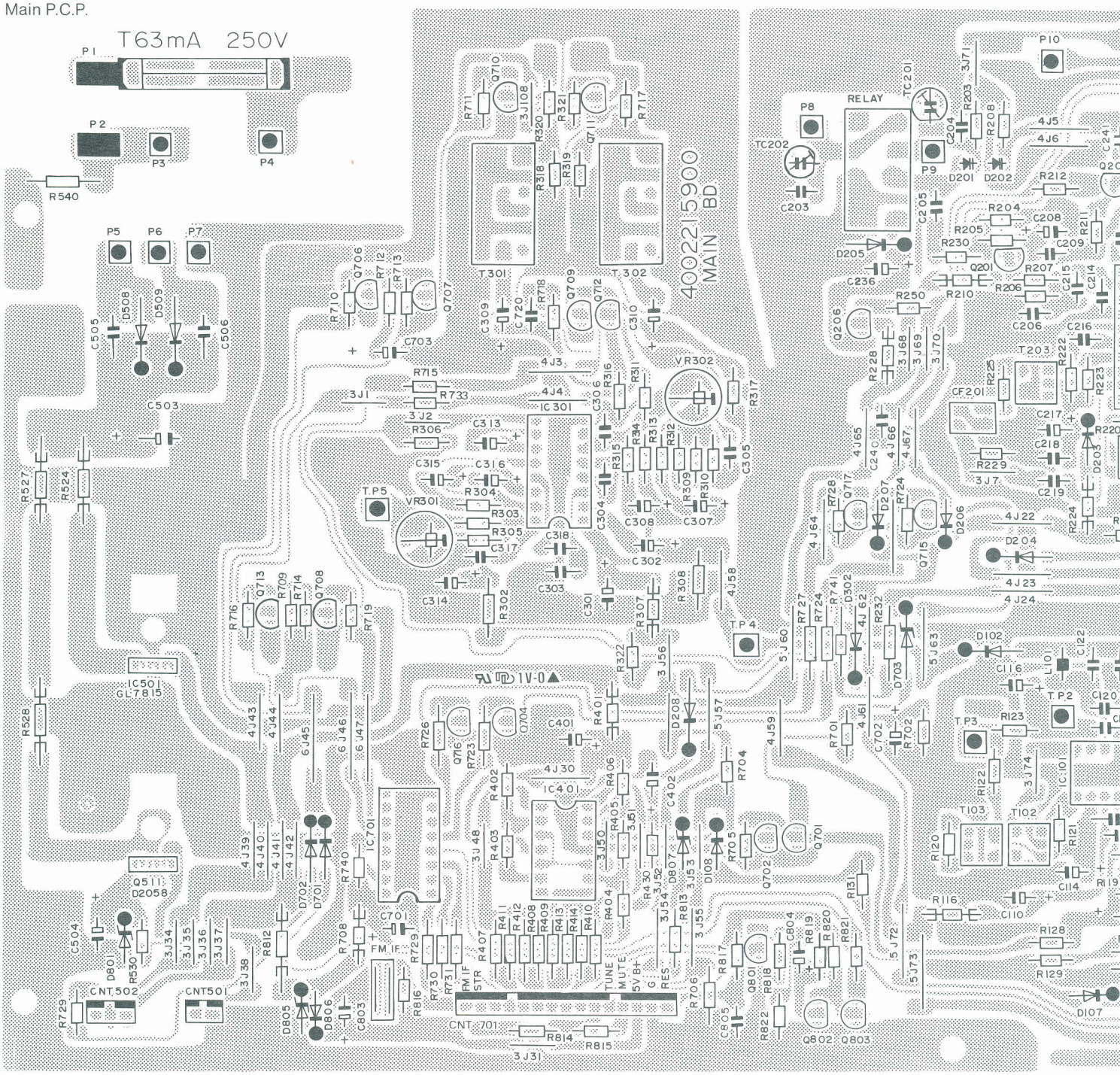

Frontplatte
Front P.C.B.

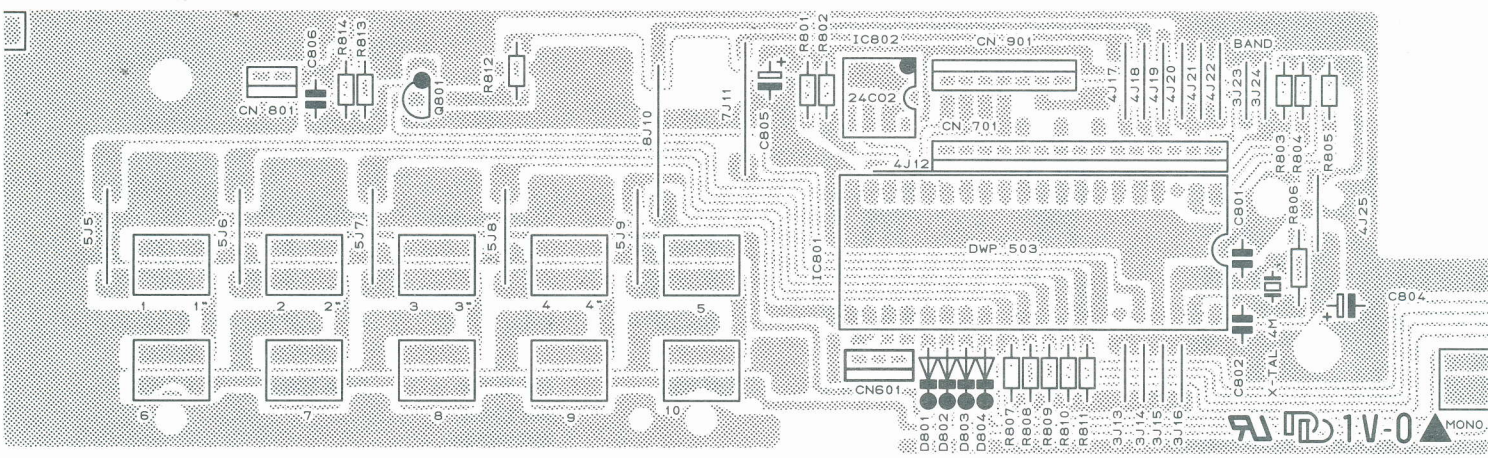

LCD-Platte
LCD P.C.B.

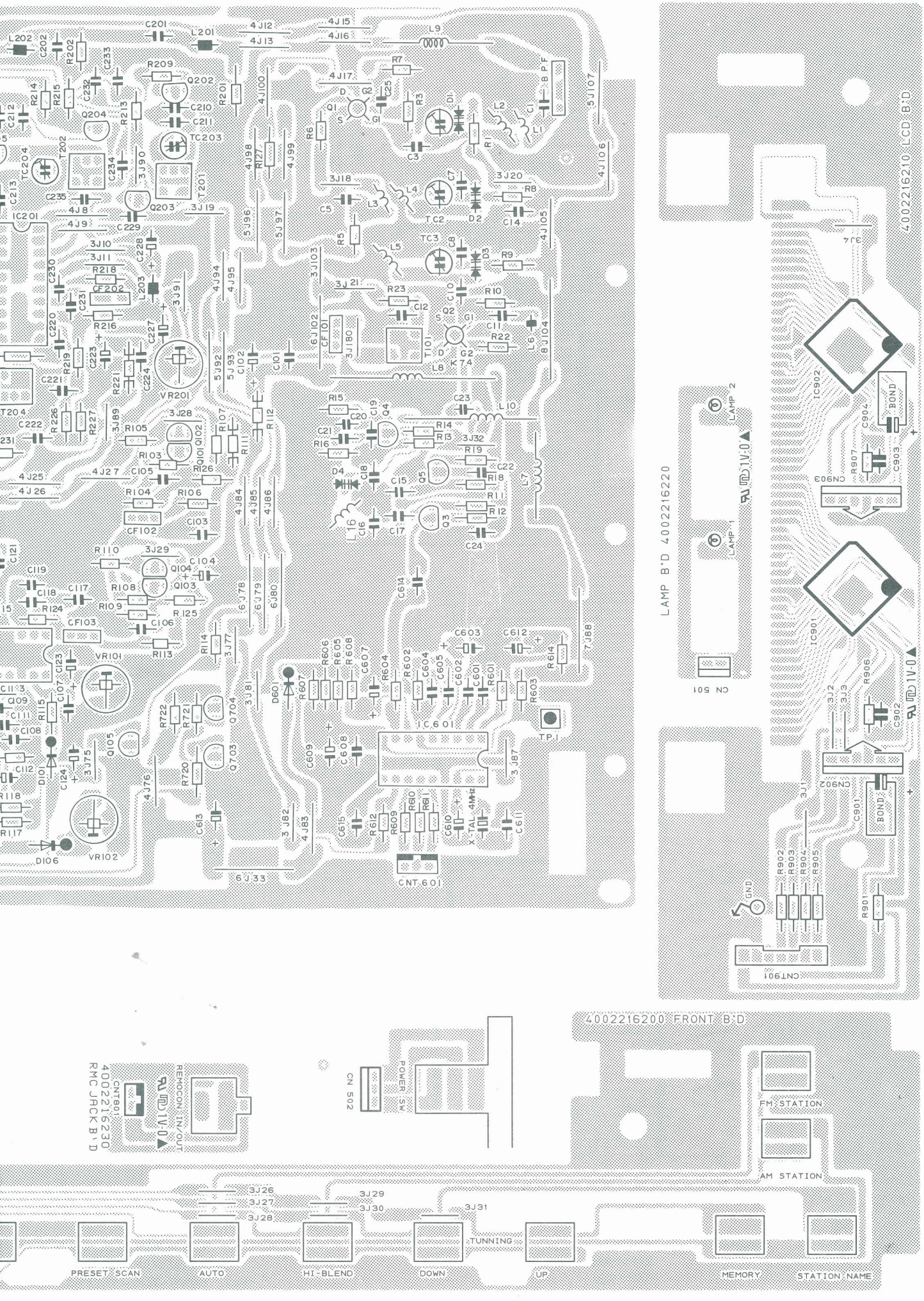

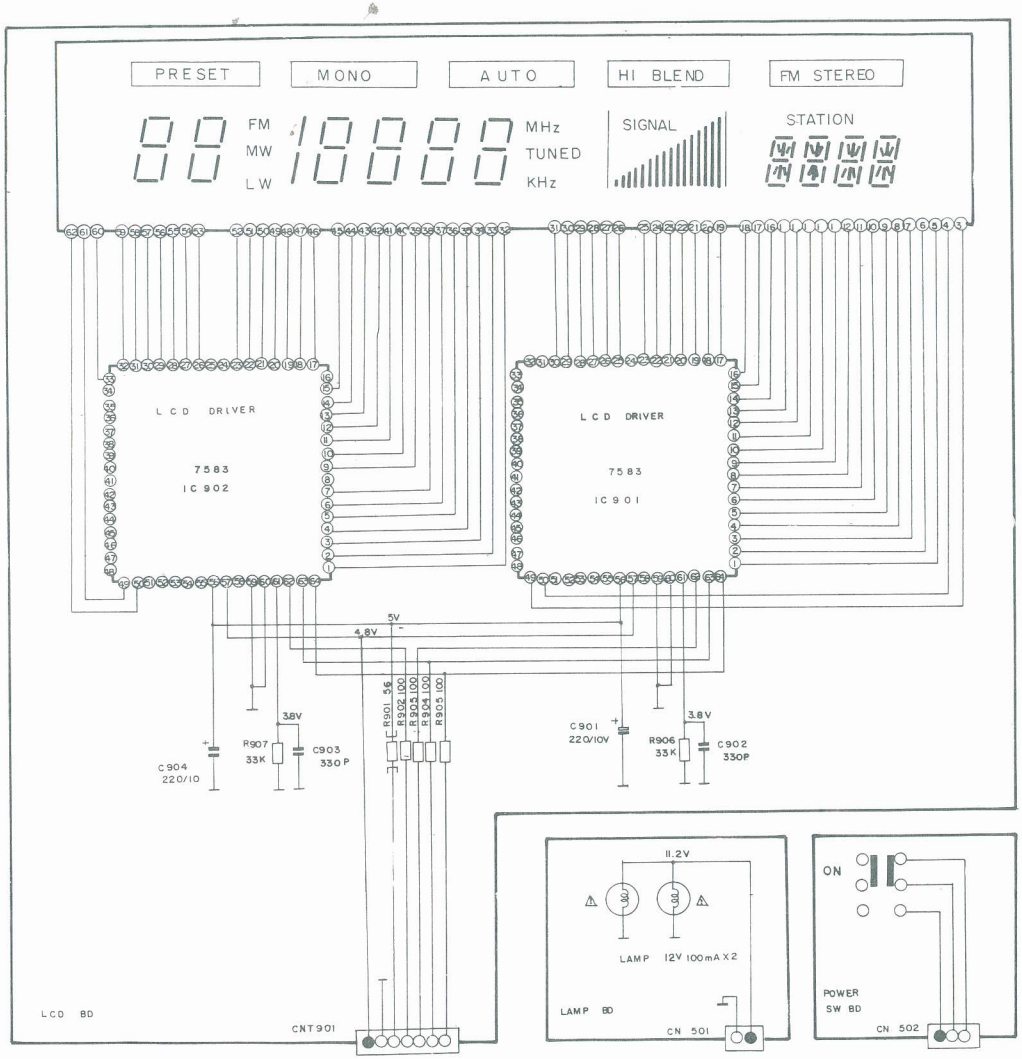

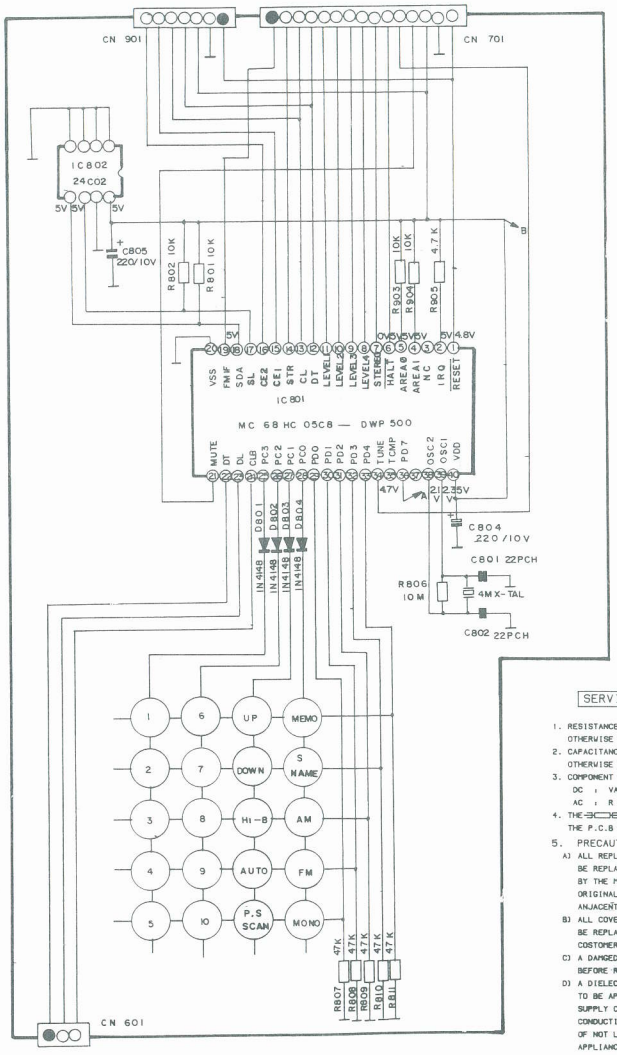

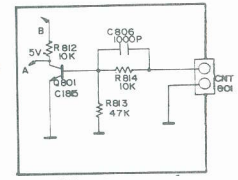

SERVICE INFORMATION

1. RESISTANCE VALUES ARE INDICATED IN OHMS UNLESS OTHERWISE SPECIFIED. (K=1,000 , M=1,000,000)
2. CAPACITANCE VALUES ARE SHOWN IN MICROFARADS UNLESS OTHERWISE NOTED. (P=MICRO - MICROFARADS)
3. COMPONENT VALUES ARE SUBJECT TO CHANGE WITHOUT NOTICES.
   DC : VALUE WITH NO SIGNAL
   AC : R.M.S (AT 1KHZ 8 OHM LOAD FULL SIGNAL)
4. THE ⊐⊏ MARKED RESISTORS ARE MOUNTED ABOVE THE P.C.B ON SLEEVES.
5. PRECAUTIONS
   A) ALL REPLACEMENT COMPONENTS IDENTIFIED BY ⚠ MUST BE REPLACED ONLY WITH ORIGINAL TYPE SPECIFIED BY THE MANUFACTUR AND INSTALLED AS THE ORIGINAL, WITH SPACERS AND POSITIONED AWAY FROM ANJACENT COMPONENTS WHERE APPLICABLE.
   B) ALL COVERS, SHIELDS AND INSULATING SPACERS MUST BE REPLACED BEFORE RETURNING APPLIANCE TO COSTOMER.
   C) A DAMGED POWER SUPPLY CORD MUST BE REPLACED BEFORE RETURNING APPLIANCE TO COSTOMER.
   D) A DIELECTRIC TEST CONSISTING OF 1060 VAC 50HZ IS TO BE APPLIED BETWEEN BOTH BLADES OF THE POWER SUPPLY CORD ATTACHMENT PLUG AND THE EXPOSED CONDUCTIVE SURFACE OF THE APPLIANCE FOR A PERIOD OF NOT LESS THAN ONE SECOND BEFORE RETURNING APPLIANCE TO CUSTOMER

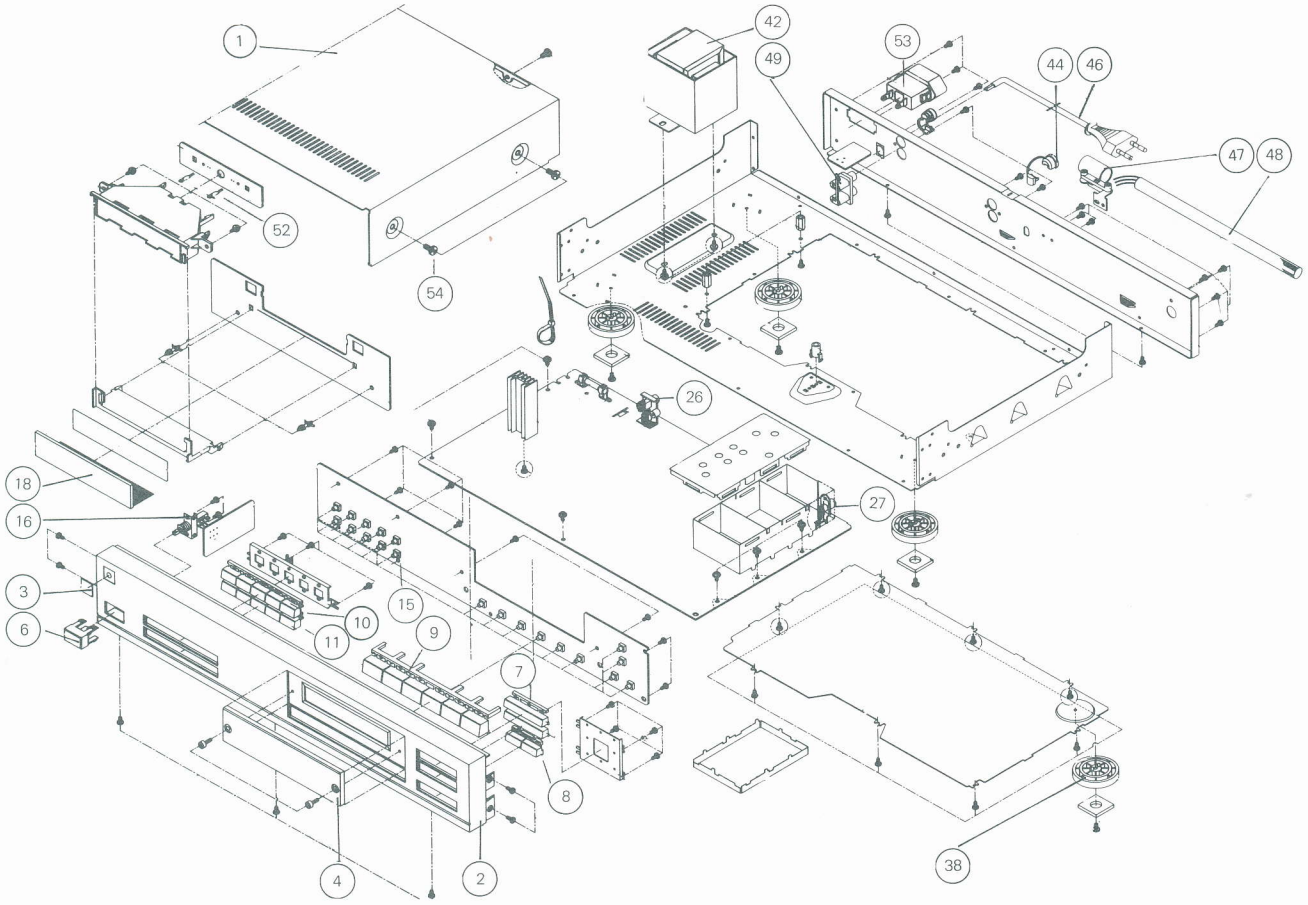

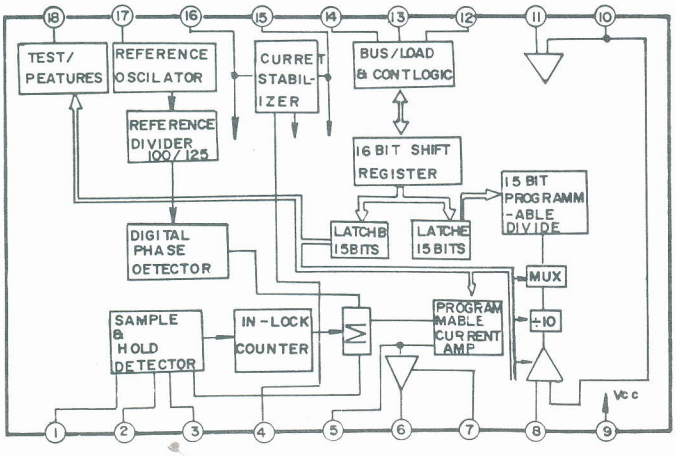

SAA 1057

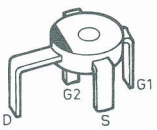

3 SK74L

LM 9018 F

KTA 1015 Y
KTC 1815 Y
KTC 1923 Y

2 SK 117 Y

KTK 161 Y

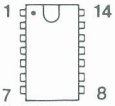

LM 324

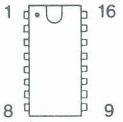

HA 12016
HA 12412
MC 14094

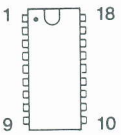

SAA 1057

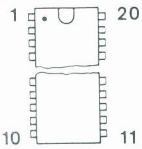

LA 1245

Ersatzteile · Replacement parts · Pièces détachées · CT 7065

Pos.	Art.-Nr.	Bezeichnung
1	283678	Gehäuseblech
2	286915	Frontblende CT 7065
3	283750	Dual-Zeichen
4	284792	Fenster
6	283665	Netztaste
7	284344	Taste A
8	284314	Taste 2-fach
9	284795	Taste 6-fach
10	286916	Taste 1–5
11	286917	Taste 6–10
15	280197	Schalter
16	284318	Schalter Power
18	284786	Display LCD 8092 M1 J9
26	282347	Cinchbuchse 1-fach
27	282346	Antennenbuchse
38	283710	Gerätefuß
42	286918	Netztrafo
44	237548	Kabeldurchführung
46	243750	Netzkabel Europa
47	282349	Antennenhalter
48	282350	MW/LW Antenne
49	286897	Remotebuchse
52	282344	Lampe
53	286898	Anschlußbuchse
54	282523	Schraube 3×8
		Grundplatte
L 1	284779	Spule FM
L 2	282221	Spule
L 3	284780	Spule FM RF
L 4	282221	Spule
L 5	282221	Spule
L 7	282191	Spule 2,2 UH
bis		
L 9	282191	Spule 2,2 UH
L 10	283328	Spule FM OSC
L 101	282194	Spule 20,8 UH
L 201	282192	Spule 47 UH
L 202	282195	Spule 2,2 MH
L 203	282325	Spule 36 MH
T 101	284781	Spule FM IFT
T 102	282183	Spule
T 103	282184	Spule
T 201	282326	Spule
T 202	282327	Spule
T 203	282189	Spule
T 204	282188	Spule
T 301	28221	Spule
T 302	282321	Spule
CF 101	284782	Keramikfilter SFE 10,7 MS 3 GH
CF 102	284783	Keramikfilter SFE 10,7 MK 1K
CF 103	284783	Keramikfilter SFE 10,7 MK 1K
CF 201	282198	Keramikfilter SFP 455
CF 202	284784	Kermikfilter BFU 450 C
D 1	282320	Diode KV 1310 A-3
bis		
2D 4	282320	Diode KV 1310 A-3
D 101	223906	Diode 1 N 4148
D 102	223906	Diode 1 N 4148
D 106	223906	Diode 1 N 4148
bis		
D 108	223906	Diode 1 N 4148
D 201	282223	Diode KV 1236
D 202	282223	Diode KV 1236
D 203	223906	Diode 1 N 4148
D 204	223906	Diode 1 N 4148

Pos.	Art.-Nr.	Bezeichnung
D 205	226501	Diode 1 N 4002
D 206	223906	Diode 1 N 4148
bis		
D 208	223906	Diode 1 N 4148
D 302	223906	Diode 1 N 4148
D 508	226501	Diode 1 N 4002
D 509	226501	Diode 1 N 4002
D 601	223906	Diode 1 N 4148
D 701	223906	Diode 1 N 4148
D 702	223906	Diode 1 N 4148
D 703	283552	Diode DZ 5,6
D 801	282063	Diode DZ 12 BM
D 805	283552	Diode DZ 5,6
D 806	223906	Diode 1 N 4148
D 807	282062	Diode DZ 9,1 BM
IC 101	268204	IC HA 12412
IC 201	282167	IC LA 1245
IC 301	264541	IC HA 12016
IC 401	261352	IC LM 324
IC 501	283679	IC GD 7815
IC 601	274730	IC SAA 1057
IC 701	276039	IC MC 14094 BCP
Q 1	282210	Transistor 3 SK 74 L
Q 2	282210	Transistor 3 SK 74 L
Q 3	282171	Transistor KTC 1923 Y
Q 4	282169	Transistor KTK 161 Y
Q 5	282171	Transistor KTC 1923 Y
Q 101	282172	Transistor LM 9018 F
bis		
Q 104	282172	Transistor LM 9018 F
Q 105	282076	Transistor KTC 1815 Y
Q 201	284785	Transistor KTK 192
Q 202	282076	Transistor KTC 1815 Y
Q 206	282076	Transistor KTC 1815 Y
Q 511	283667	Transistor 2 SD 2058 Y
Q 701	282376	Transistor KTC 1815 Y
bis		
Q 703	282376	Transistor KTC 1815 Y
Q 704	282077	Transistor KTA 1015 Y
Q 706	282076	Transistor KTC 1815 Y
Q 707	282077	Transistor KTA 1015 Y
Q 708	282077	Transistor KTA 1015 Y
Q 709	282075	Transistor 2 SK 117 Y
Q 712	282075	Transistor 2 SK 117 Y
Q 713	282076	Transistor KTC 1815 Y
Q 714	282076	Transistor KTC 1815 Y
Q 715	282077	Transistor KTA 1015 Y
Q 716	282076	Transistor KTC 1815 Y
Q 717	282077	Transistor KTA 1015 Y
X 1	281411	Quartz 4 MHz
RY 1	286913	Relais
		Frontplatte
D 801	223906	Diode 1 N 4148
bis		
D 804	223906	Diode 1 N 4148
IC 801	284788	IC UP DWP 500
IC 802	284798	IC 24 CO 2
		LCD-Platte
IC 901	283717	IC LC 7583
IC 902	283717	IC LC 7583
LCD	284786	Display LCD 8092 M1J9
Lamp 1	282344	Lampe
Lamp 2	282344	Lampe
	284969	Bedienungsanleitung

Änderungen vorbehalten! Subject to change! Sous réserve de modification!

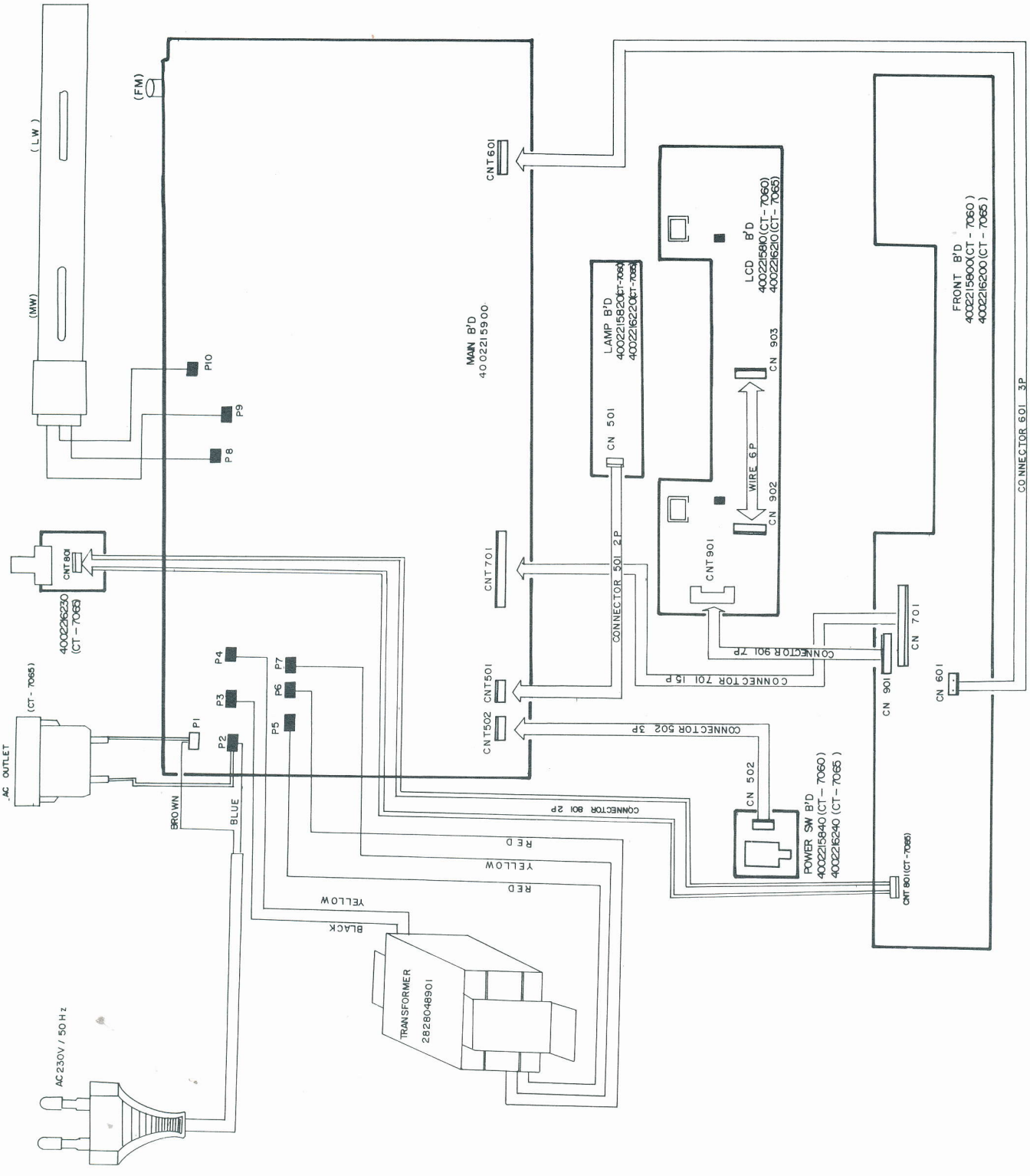
(LW)
(MW)
(FM)
P10
P9
P8
MAIN B'D
4002215900
CNT601
LAMP B'D
4002215820(CT-7060)
4002216220(CT-7065)
CN 501
LCD B'D
4002215810(CT-7060)
4002216210(CT-7065)
CN 903
WIRE 6P
CN 902
CNT901
FRONT B'D
4002215800(CT-7060)
4002216200(CT-7065)
CONNECTOR 601 3P
CNT801
4002216230
(CT-7065)
CNT701
CONNECTOR 501 2P
CONNECTOR 901 7P
CONNECTOR 701 15P
CN 701
CN 901
CN 601
P4
P7
P3
P6
P5
P2
P1
CNT501
CNT502
CONNECTOR 502 3P
AC OUTLET
(CT-7065)
CN 502
POWER SW B'D
4002215840(CT-7060)
4002216240(CT-7065)
CONNECTOR 801 2P
CNT 801(CT-7065)
BROWN
BLUE
RED
YELLOW
RED
YELLOW
BLACK
TRANSFORMER
2828048901
AC 230V / 50Hz