Dual NEW TECH

CD 1040

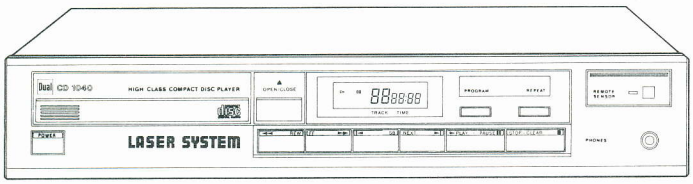

Service-Anleitung
Service Manual
Instructions de Service

Technische Daten Meßwerte = typische Werte	**Technical data** Measured values = typical values	**Caractéristiques techniques** Valeurs mesurées = valeurs typiques	CD 1040
Frequenzbereich ± 0,5 dB	**Frequency response**	**Courbe de réponse**	5–20 000 Hz
Geräuschspannungsabstand	**Signal to noise ratio**	**Rapport signal/bruit**	96 dB
Dynamikbereich	**Dynamic range**	**Dynamique**	93 dB
Übersprechdämpfung (1 kHz)	**Crosstalk (1 kHz)**	**Diaphonie (1 kHz)**	90 dB
Klirrfaktor (1 kHz)	**Harmonic distortion (1 kHz)**	**Distorsion harmonique (1 kHz)**	0,004 %
Gleichlaufschwankungen	**Wow and flutter**	**Fluctuations**	± 0,001 %
Ausgangsspannung	**Output voltage**	**Tension de sortie**	2 V
Max. programmierbare Musiktitel	**Max. music title programming**	**Titres de musique au max. programmés**	15
D/A Wandler	**D/A Converter**	**D/A Convertisseur**	16 Bit linear (Single)
Abtastfrequenz	**Pick up frequency**	**Fréquence de pick-up**	88,2 kHz
Abtastsystem	**Recording system**	**Système d'enregistrement**	3-Strahl-Laser 3-beam optical pick up
Leistungsaufnahme	**Power consumption**	**Consommation**	16 W
Netzspannung	**Mains voltage**	**Tension secteur**	220 V
Netzfrequenz	**Line frequency**	**Fréquence secteur**	50 Hz

Dual GmbH · Postfach 1144 · 7742 St. Georgen/Schwarzwald

921 547 0487

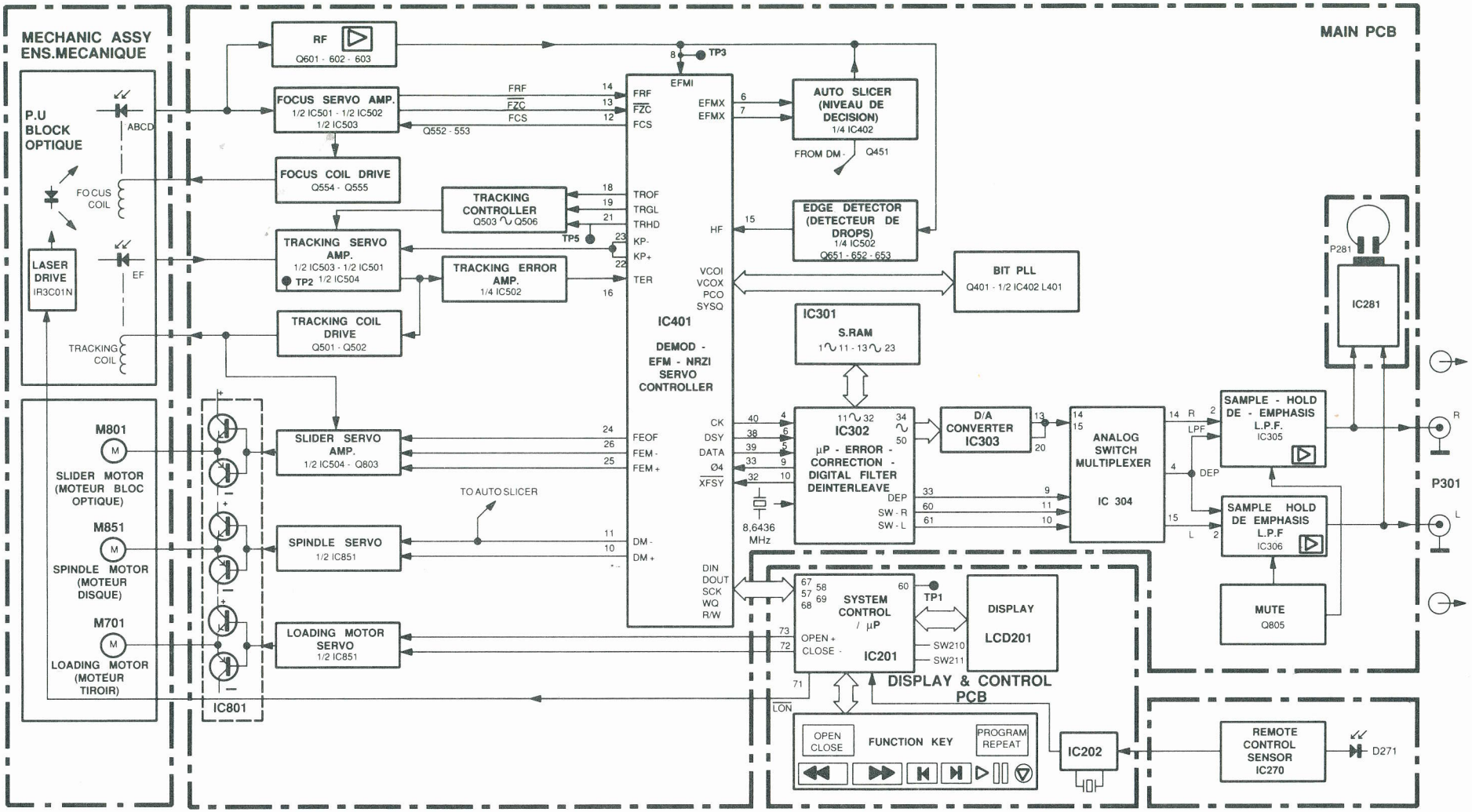

CK : Takt
clock
horloge

DEP : Deemphasis-Steuerung
emphasis control
commande de filtre B.F.

DSY : Datensynchronisierung
data synchro
synchro de données

CLS : Schublade geschlossen
tray close
tiroir fermé

DIN : Dateneingang
data in
entrée de données

DOUT : Datenausgang
data out
sortie de données

DM+/_ : Disc-Motor PWM-Steuersignal
spindle motor control
commande du moteur disque

EFMI : EFM Signaleingang
EFM signal in
entrée signal non démod. EFM

EFMX : EFM-Signalausgang
EFM signal out
sortie signal non démod. EFM

FEM+/_ : Schlittenmotor Schnellgang-Steuersignal
high speed slider motor control
commande rapide du moteur du bloc optique

FEOF : Schlittenmotor-Abschaltung
slider error correction off
arrêt de correction moteur bloc optique

FRF : Focus-Fehlersignal
focus retraction
signal d'erreur de focalisation

FZC : Focus Nulldurchgang
focus zero cross

FCS : Focus-Regelung aus
focus signal
signal de correction de focus

KP+/_ : Spurwechsel-Impulse
kick pulse
impulsions de tracking

LON : Laser ein
Lazer on
allumage Laser

OPN : Schublade offen
tray open
tiroir ouvert

Ø 4 : 4.328 MHz

TER : Spurfehlersignal
tracking error signal
signal d'erreur de tracking

TRHD : Spurregelung während Spurwechsel
tracking hold by the µP
correction de tracking par le µP pendant KP

TRGL : Abschwächung Spurregel-Verstärkung
tracking gain low
atténuation de la correction de tracking

TROF : Spurregelung aus
tracking off
arrêt de la correction d'erreur

SYSQ : Synchronisierung Q-Kanal
channel Q synchro
synchro du mot Q

XFSY : Frame-Synchronisierung 7,35 kHz
trame synchro 7.35 kHz
synchro trame 7,35 kHz

Vorsicht
Das Gerät
nachfolgend
– Das Gerä
Gerät tritt
– Nicht in d
– Hände u
bringen.
– Laserschu
tragen.
– Unbeteili

Achtung
Die Einstellu
Platte dürfen

CL
LA
AF

Inform
Explan

Laser

CLASS 1. LASER PRODUCT
LASER KLASSE 1
APPAREIL A LASER DE CLASSE 1

Informationsetikett auf Geräterückseite.
Explanatory label on rear side.

Laser: $\lambda = 780$ nm

CAUTION - INVISIBLE LASER RADIATION WHEN OPEN AND INTERLOCKS FAILED OR DEFEATED AVOID EXPOSURE TO BEAM

ATTENTION - RAYONNEMENT LASER INVISIBLE DANGEREUX EN CAS D'OUVERTURE ET LORSQUE LA SÉCURITÉ EST NEUTRALISÉE. EXPOSITION DANGEREUSE AU FAISCEAU.

VORSICHT -UNSICHTBARE LASERSTRAHLUNG. WENN ABDECKUNG GEÖFFNET UND SICHERHEITSVERRIEGELUNG ÜBERBRÜCKT. NICHT DEM LASERSTRAHL AUSSETZEN!

Warnetikett innen im Gerät.
Warning label inside the unit.

Vorsicht

Das Gerät beinhaltet eine Lasercomponente, daher im Servicefall nachfolgende Hinweise unbedingt beachten:

- Das Gerät arbeitet mit unsichtbarer Laserstrahlung. Bei geöffnetem Gerät tritt unterhalb des Plattenhalters Laserstrahlung aus.
- Nicht in den Laserstrahl blicken.
- Hände und reflektierende Gegenstände nicht in den Laserstrahl bringen.
- Laserschutzbrille nach DIN 58 215 für die angegebene Wellenlänge tragen.
- Unbeteiligte Personen vom Arbeitsplatz fernhalten.

Achtung

Die Einstellungen für den Laserstrahl am Laserabtaster und der LP-Platte dürfen nicht verstellt werden.

Caution

This CD-player operates with an invisible laser beam. If service is necessary please pay attention to the following notes:

- When the set is open, laser radiation emerges beneath the record holder arm.
- Do not look into beam.
- Do not expose hands or reflecting objects into laser beam.
- Please wear laser protective glasses according to DIN 58 215 for mentioned wave length.
- Please keep unconcerned people away from working place.

Attention

It is not allowed to adjust positioning of laser beam at laser scanning and LP-plate.

Servicehinweise

AUSBAU DER SCHUBLADE Ⓐ

- Anschlagschraube Ⓑ herausdrehen und durch Drücken der Taste «OPEN-CLOSE» die Schublade ausfahren und mit der Hand ganz herausziehen.
- Wenn der Schubladenmotor nicht funktioniert s. Fig. 2.

AUSBAU DES LAUFWERKS

- Die 2 Schrauben herausdrehen (s. Fig. 4).

PLATTENWIEDERGABE OHNE SCHUBLADE

- Netzstecker ziehen, Schublade entfernen und anschließend Kurvenrad Ⓒ in Pfeilrichtung bis zu der in Fig. 3a angegebenen Position drehen.
- Platte auflegen Ⓓ und Kurvenrad Ⓒ in der anderen Richtung bis zu der in Fig. 3b angegebenen Postition drehen.
- Netzstecker wieder einstecken: die Wiedergabe kann erfolgen.
- Zur Entnahme der Platte, Kurvenrad Ⓒ betätigen (s. Fig. 3a), um den Andruckarm Ⓔ anzuheben, dann die Platte entnehmen.

EINBAU DER SCHUBLADE

- Netzstecker ziehen, Kurvenrad Ⓒ in Position bringen.
- Schublade ganz einschieben, Schraube Ⓑ eindrehen, Netzstecker wieder einstecken.

Service information

DISMANTLING THE TRAY ASSEMBLY Ⓐ

- After dismantling the front panel, take off the tray stopper screw Ⓑ, press the «OPEN-CLOSE» button th begin removing the tray, and pull it out.
- If the loading motor doesn't rotate (see fig. 2).

REMOVING MECANICAL ASSEMBLY

- Remove the 2 screws (see fig. 4)

PLAYING A C.D. WITHOUT TRAY ASSEMBLY

- Unplug the unit, take off the tray assembly, turn the main gear Ⓒ in direction of the arrow up to the position indicated in fig. 3a.
- Put the C.D. on the turntable Ⓓ and turn main gear Ⓒ in the other direction up to the position indicated in fig. 3b.
- Reconnect the unit at the mains. Playback can now occur.
- To take off the C.D. move the main gear (see. fig. 3a) so as to raise the counter-lever Ⓔ and disengage the C.D.

REPLACING THE TRAY ASSEMBLY

- Umplug the unit, put the main gear Ⓒ in position fig. 3c.
- Slid the tray fully in, replace screw Ⓑ. Reconnect the unit at a mains outlet.

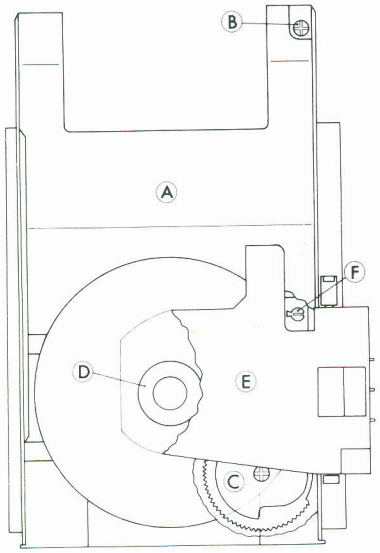

Fig. 1

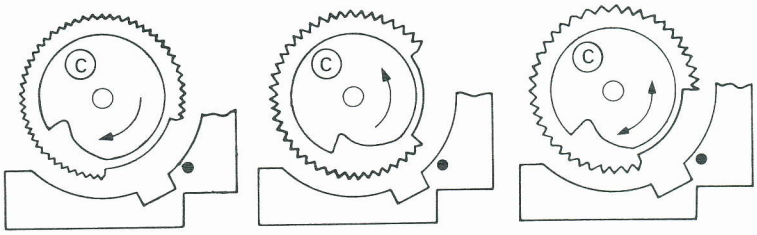

Fig. 3a Fig. 3b Fig. 3c

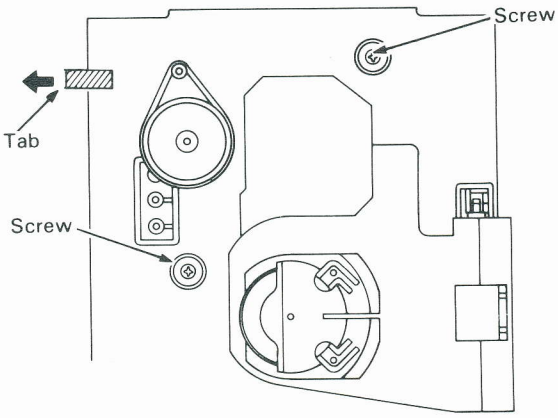

Fig. 4

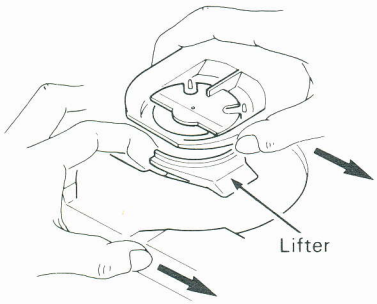

Fig. 2

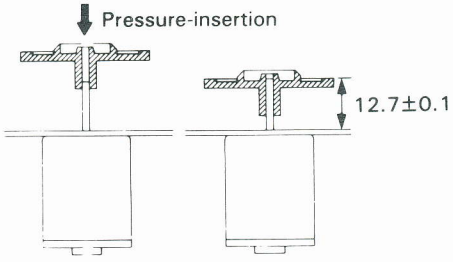

* Wenn
Steller
If Vpp
Don't t
(adjust

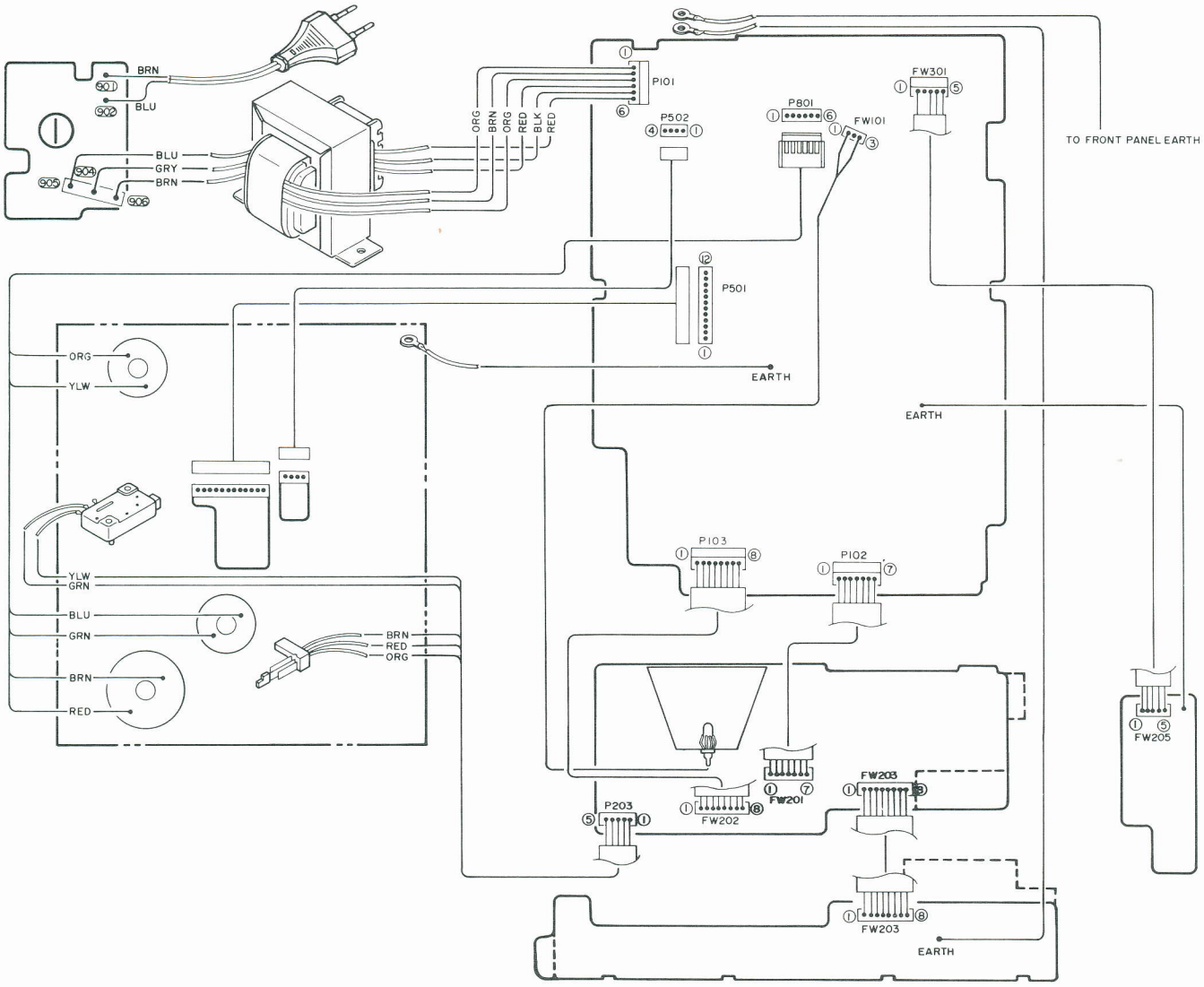

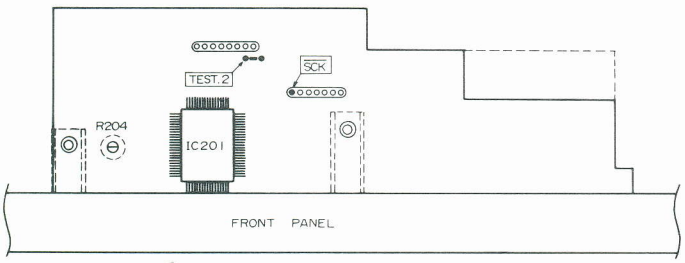

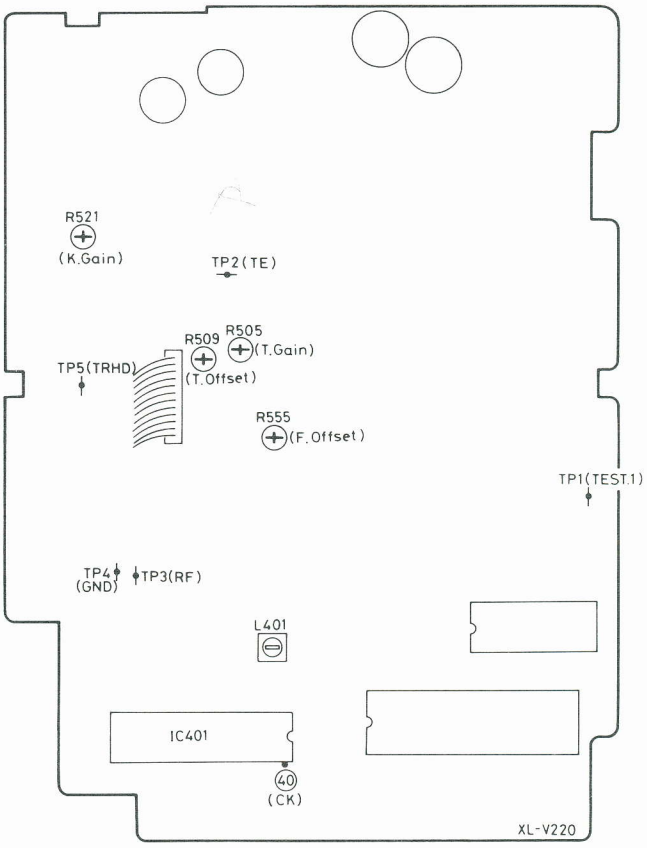

* Wenn Vss < 1,7 V, ist die Laserdiode defekt.
Steller auf der Laserplatte nicht verstellen! (Fabrikeinstellung)
If Vpp < 1,7 V Laser diode is considered defective.
Don't touch the semifixed on the pick up R.C.B.
(adjusted by manufacturer)

LASER OUTPUT

	Check Contrôle Kontrollieren	TP3 Vpp > 1,7 V *

PLL FREERUN (Battement libre du PLL)

TP3	L401	IC401 pin 40 Hz F = 4,322 ± 0,001 MHz

CLOCK FREQUENCY (Fréquence d'horloge)

TEST 2 Power off Power on	R204	SCK ① FW201 Hz F = 200 kHz ± 4 kHz

Y AXIS

	Schublade entfernen Screw Vis Schraube Ⓕ (fig. 1)	TP3 V maximum

FOCUS SERVO OFFSET

	R555	TP3 V maximum

TRACKING SERVO GAIN

TP1	R505	TP2 V = 2 Vpp

TRACKING SERVO OFFSET

TP1	R509	TP2 a b a = b

KICK GAIN

	R521	MV Emitter T 501 1. Max. Linksanschlag Max. Left-hand stop 2. minus 3 dB

Play normal disc | Stop | Pause | Test point | GND | Oscilloscop | Hz Frequency Meter | Short - Court-circuit Kurzschlus | MV Millivoltmeter

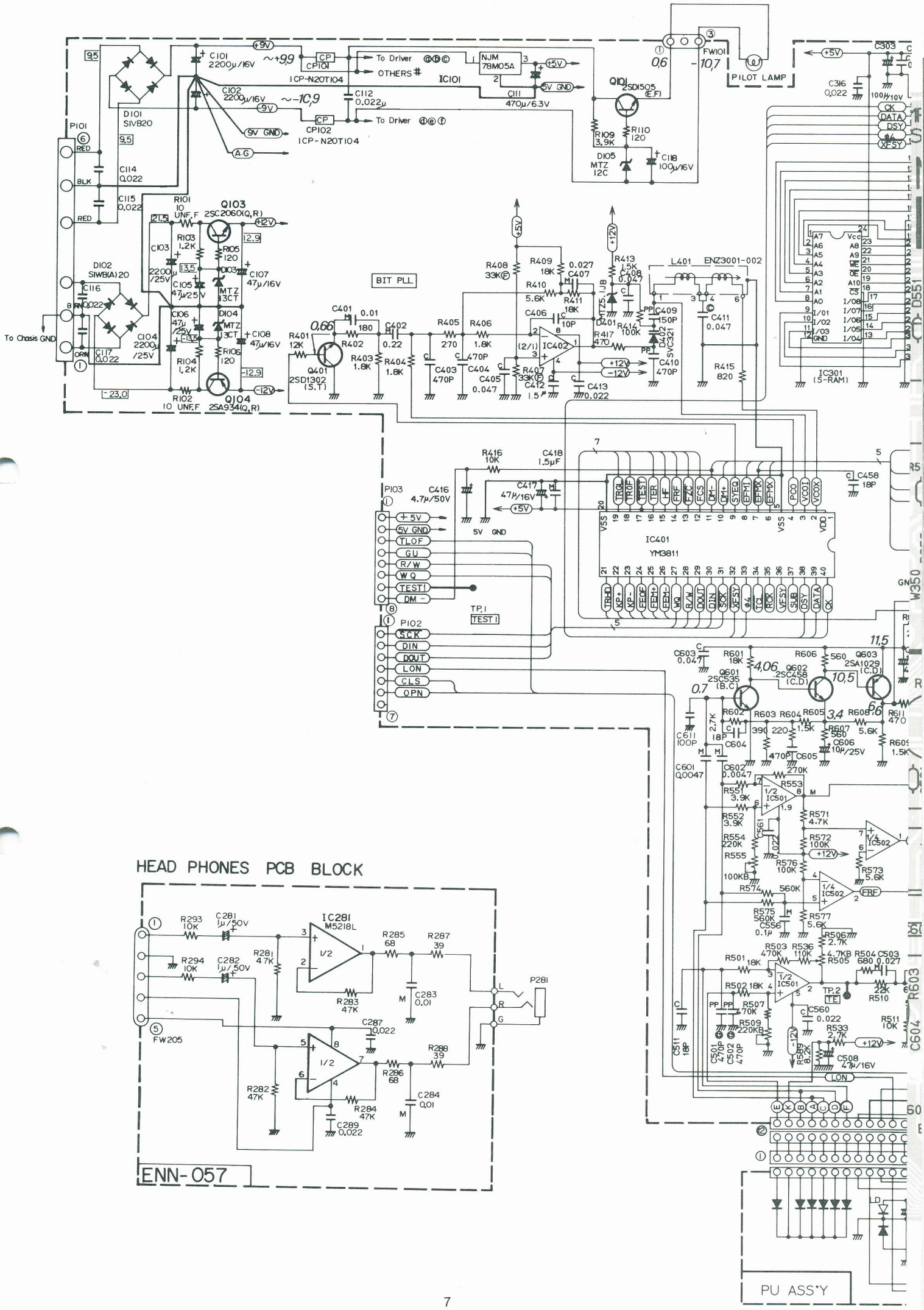
HEAD PHONES PCB BLOCK
ENN-057
PU ASS'Y
BIT PLL
PILOT LAMP
To Chasis GND
To Driver
OTHERS
IC101
NJM 78M05A
IC401
YM3811
IC301
(S-RAM)
IC281
M5218L
L401 ENZ3001-002
Q101 2SD1505 (E,F)
Q103 2SC2060(Q,R)
Q104 2SA934(Q,R)
Q401 2SD1302 (S,T)
Q601 2SC535 (B,C)
Q602 2SC458 (C,D)
Q603 2SA1029 (C,D)
P101
P102
P103
P281
FW101
FW205
TP.1 TEST I
TP.2 TE

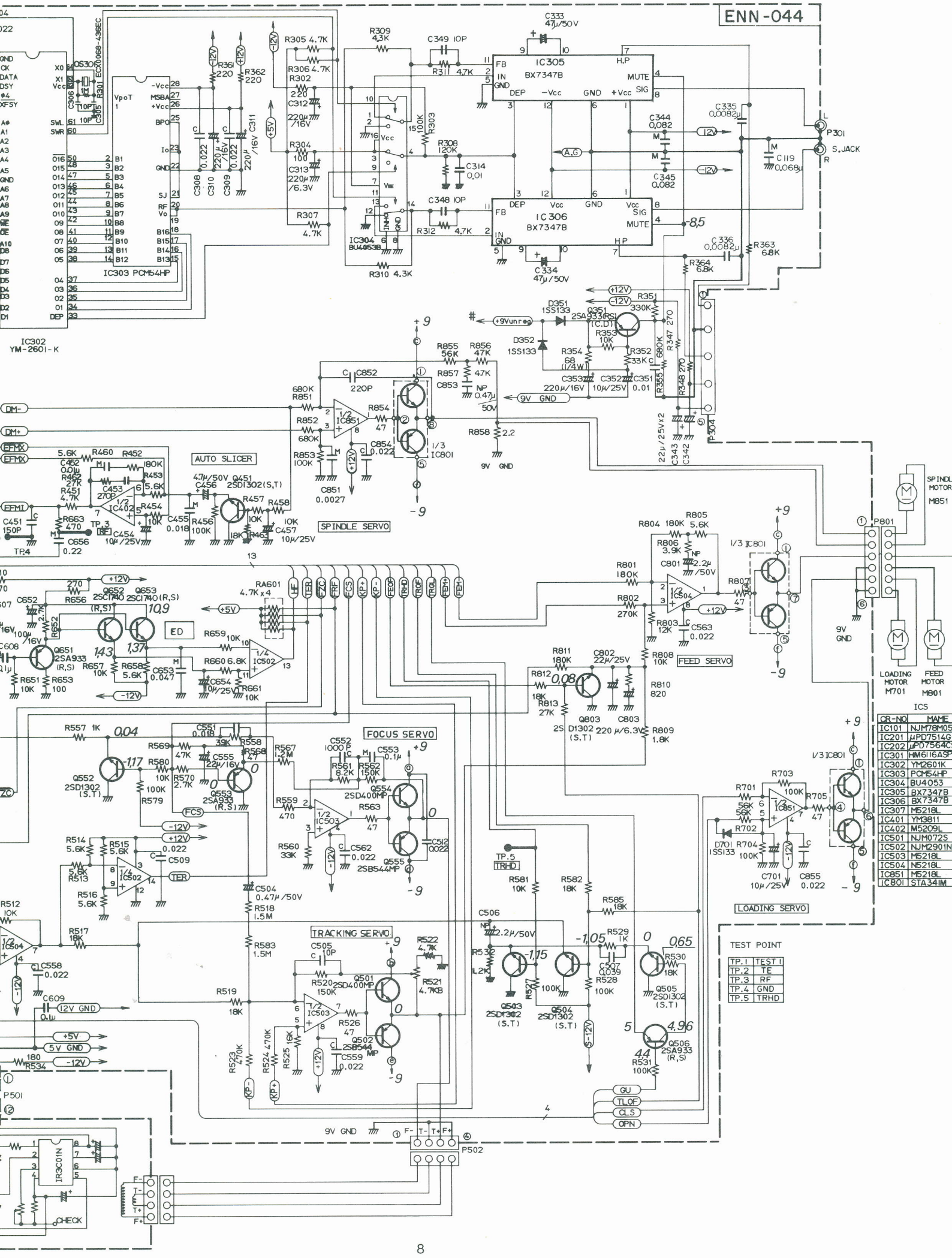
ENN-044
IC302
YM-2601-K
IC303 PCM54HP
IC304
BU4053B
IC305
BX7347B
IC306
BX7347B
IC801
STA341M
P301
S.JACK
P304
P801
P502
P501
SPINDLE SERVO
AUTO SLICER
FOCUS SERVO
TRACKING SERVO
FEED SERVO
LOADING SERVO
SPINDLE MOTOR M851
LOADING MOTOR M701
FEED MOTOR M801
9V GND
12V GND
5V GND
TP.5 TRHD
TEST POINT
TP.1 TEST1
TP.2 TE
TP.3 RF
TP.4 GND
TP.5 TRHD
ICS
CR-NO NAME
IC101 NJM78M05
IC201 μPD7514G
IC202 μPD7564C
IC301 HM6116ASP
IC302 YM2601K
IC303 PCM54HP
IC304 BU4053
IC305 BX7347B
IC306 BX7347B
IC307 M5218L
IC401 YM3811
IC402 M5209L
IC501 NJM072S
IC502 NJM2901N
IC503 M5218L
IC504 M5218L
IC851 M5218L
IC801 STA341M

IC402	▷	□
1	0,01	0,01
2	2,52	2,52
3	2,51	2,51
4	− 12,9	− 12,9
5	2,47	2,2
6	2,47	2,2
7	2,17	2,2
8	12,9	12,9

IC501	▷	□
1	12,9	12,9
2	0,01	0
3	1,93	0
4	1,93	0
5	− 12,9	− 12,9
6	0,01	0
7	0,01	0
8	0,04	0
9	12,9	12,9

IC503	▷	□
1	− 0,75	0,57
2	0	0
3	0	0
4	− 12,9	− 12,9
5	0	0
6	0	0
7	0	0
8	12,9	12,9

IC504	▷	□
1	1,23	0
2	0,07	0
3	0,07	0
4	− 12,9	− 12,9
5	0	0
6	0	0
7	0	0
8	12,9	12,9

IC801	▷	□
1	9,6	10,2
2	1,48	0,57
3	1,2	0,01
4	0	0
5	− 10,6	− 10,8
6	0	0
7	0,5	0
8	0,9	0,03

IC851	▷	□
1	1,5	0,57
2	0,05	0
3	0,05	0
4	− 12,9	− 12,9
5	0	0
6	0	0
7	0	0
8	12,9	12,9

IC502	▷	□
1	5	5
2	4,9	0,1
3	12,9	12,9
4	0,7	0,7
5	1,22	0,02
6	0	0
7	0,62	0,58
8	6,46	6,47
9	6,4	6,41
10	1,37	0,11
11	0,85	0,07
12	0	0
13	0,1	0,09
14	2,26	0,1

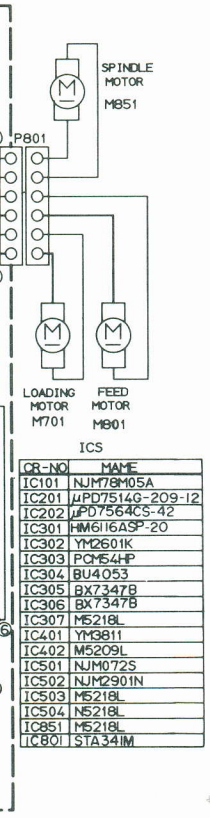

ICS

CB-NO	NAME
IC101	NJM78M05A
IC201	μPD7514G-209-12
IC202	μPD7564CS-42
IC301	HM6116ASP-20
IC302	YM2601K
IC303	PCM54HP
IC304	BU4053
IC305	BX7347B
IC306	BX7347B
IC307	M5218L
IC401	YM3811
IC402	M5209L
IC501	NJM072S
IC502	NJM2901N
IC503	M5218L
IC504	M5218L
IC851	M5218L
IC801	STA341M

Timing Chart 1. Focus Search

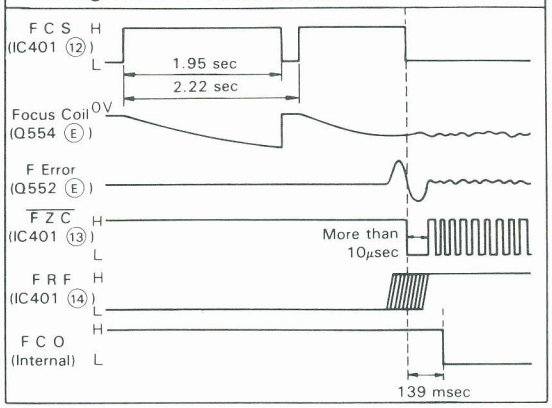

Timing Chart 2. Spindle Motor Start

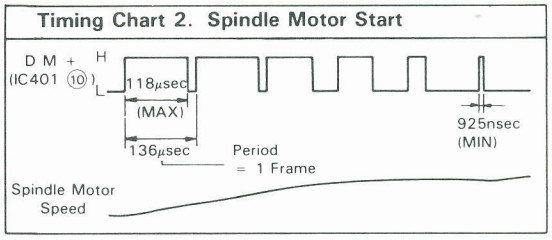

Timing Chart 3. Tracking Loop On

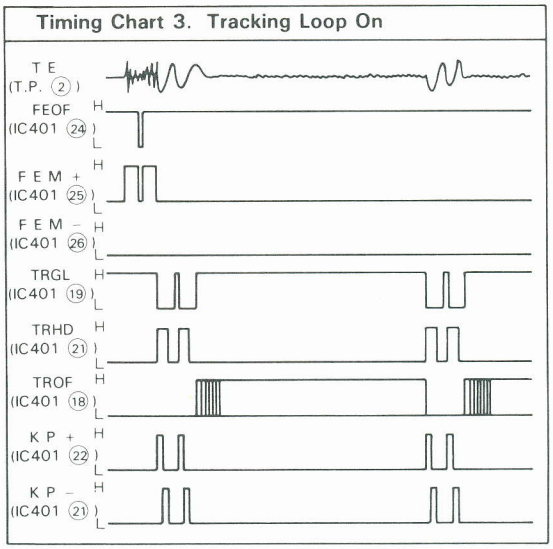

Timing Chart 4. Sync. Pattern Search

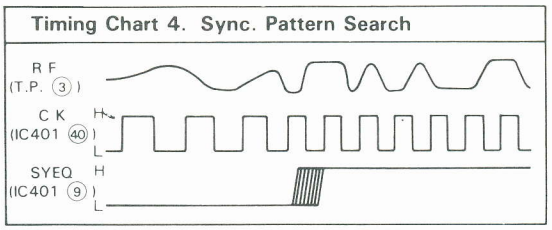

Timing Chart 5. Spindle Motor Brake

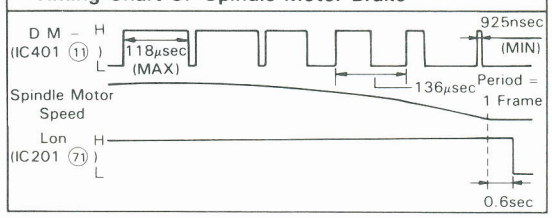


10 MΩ

▷ play

□ stop

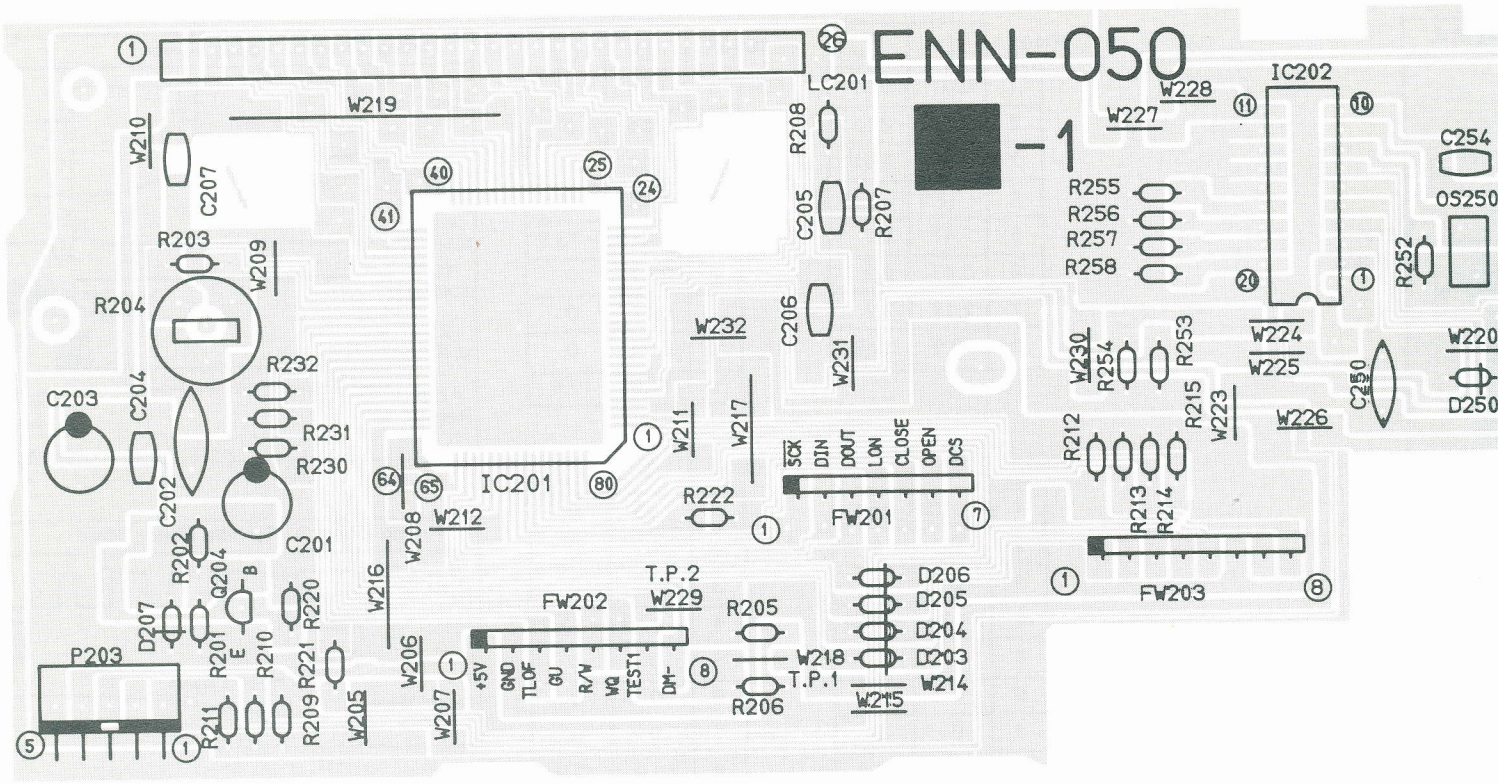

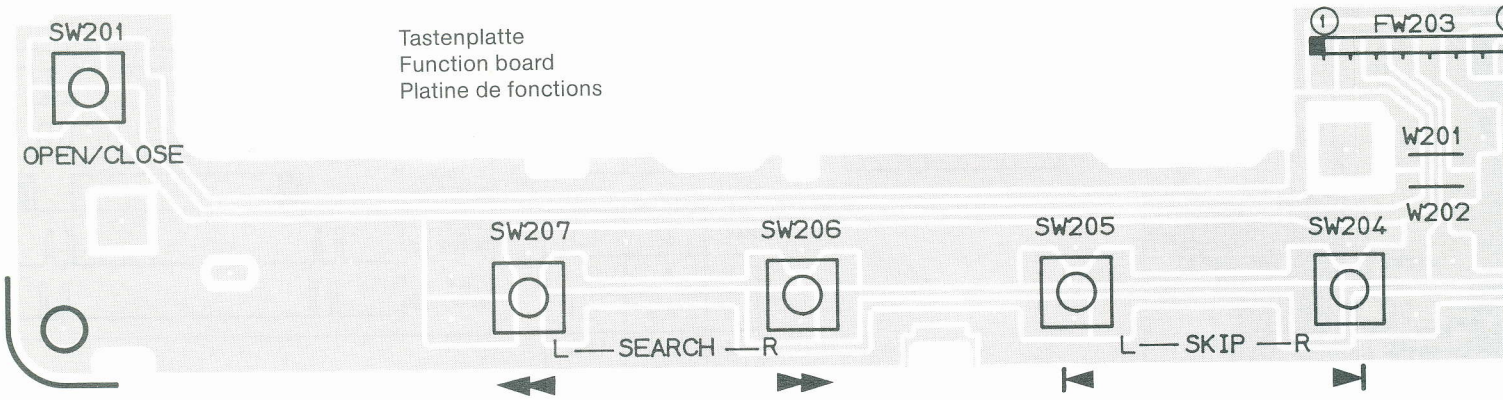

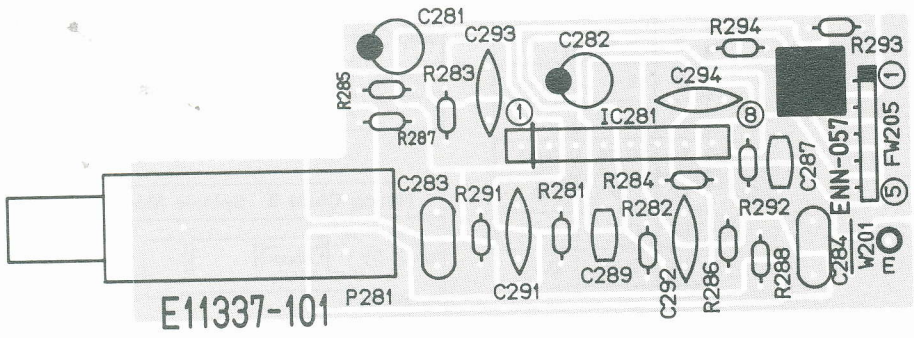

Kopfhörerplatte
Headphone board
Platine prise-casque

Bestückungsseite
Component side
Côté composants

Anzeigeplatte
Display / control board
Platine afficheur / commandes

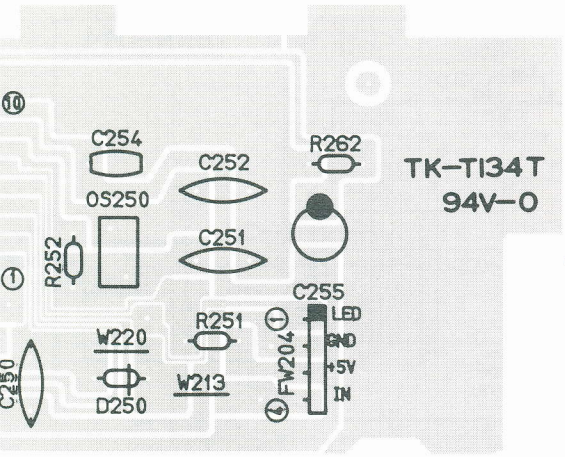

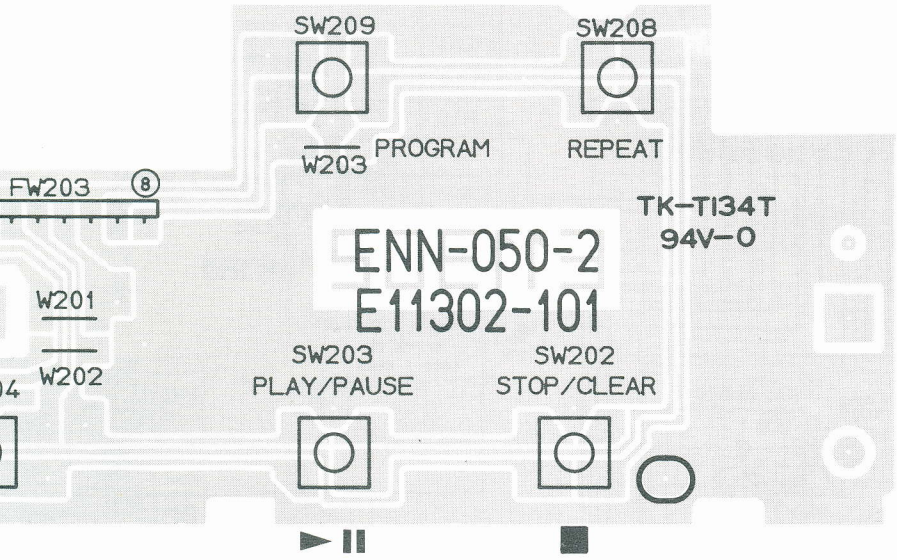

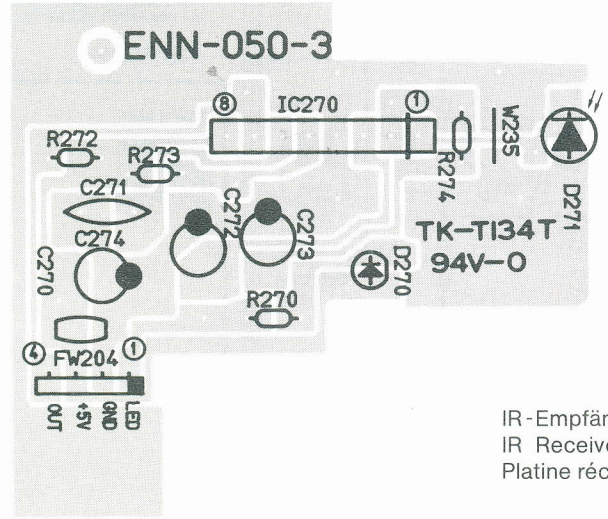

IR-Empfängerplatte
IR Receiver board
Platine récepteur IR

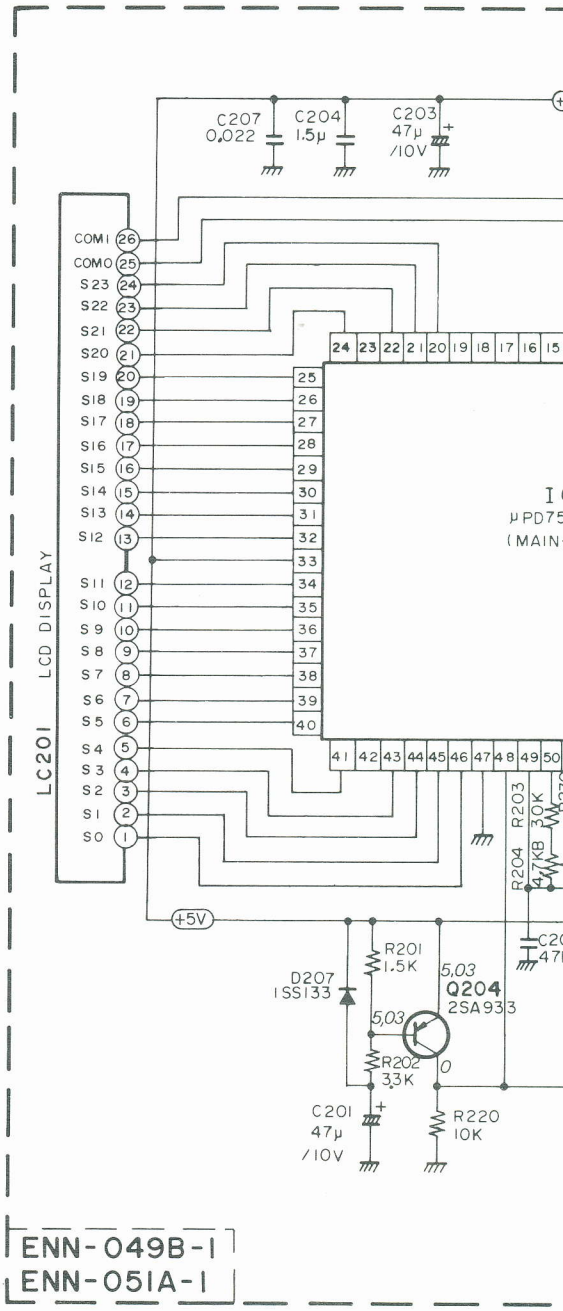

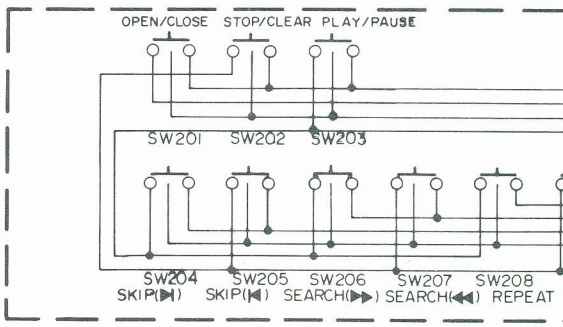

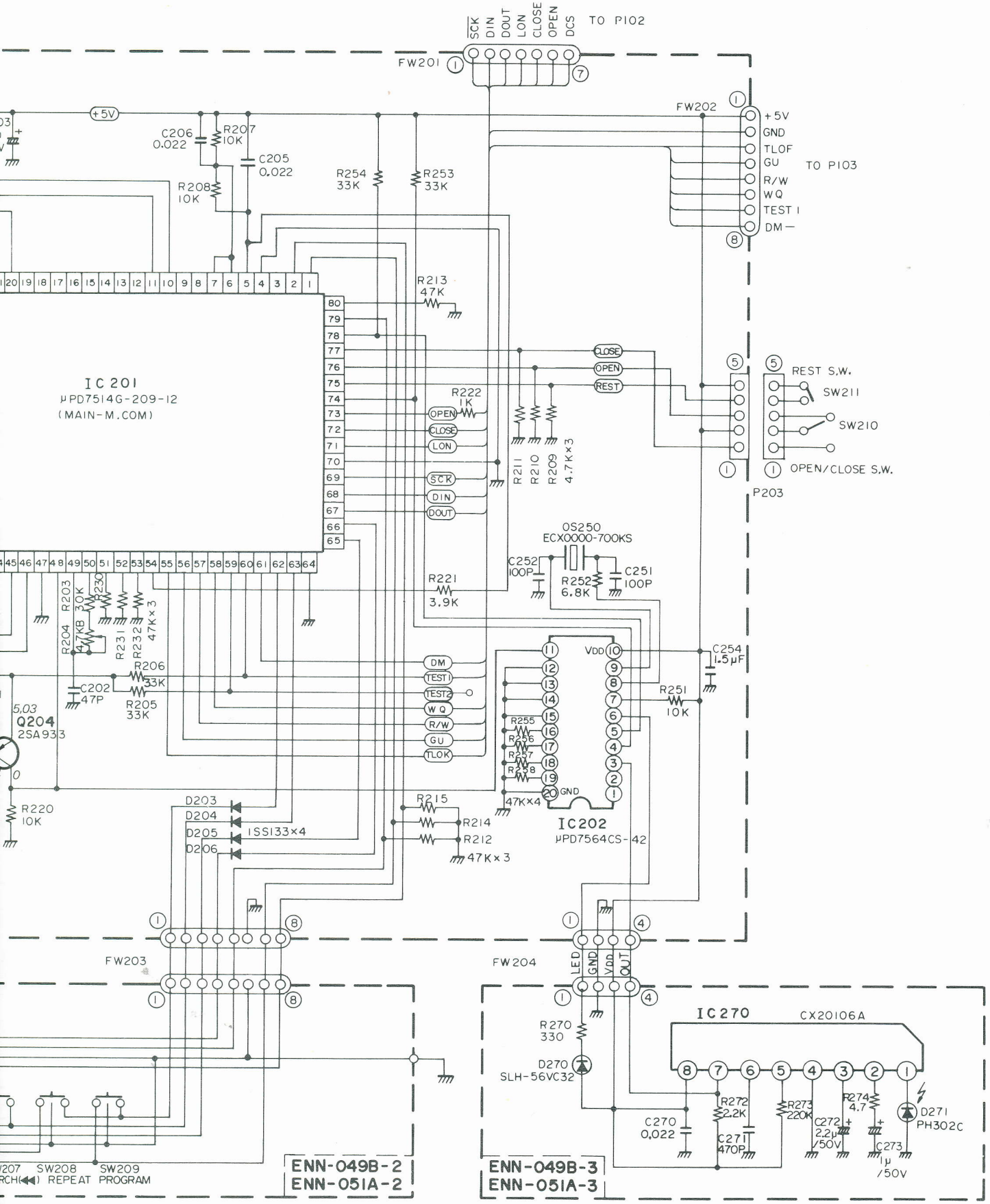
SCK DIN DOUT LON CLOSE OPEN DCS
TO P102
FW201
FW202
+5V
GND
TLOF
GU
R/W
WQ
TEST 1
DM−
TO P103
C206 0.022
R207 10K
C205 0.022
R208 10K
R254 33K
R253 33K
R213 47K
IC 201
μPD7514G-209-12
(MAIN-M.COM)
R222 1K
OPEN
CLOSE
LON
SCK
DIN
DOUT
R211
R210
R209
4.7K×3
REST S.W.
SW211
SW210
OPEN/CLOSE S.W.
P203
OS250
ECX0000-700KS
C252 100P
R252 6.8K
C251 100P
R221 3.9K
R203 30K
R230 47KB
R231
R232 47K×3
R204
R206 33K
C202 47P
R205 33K
Q204
2SA933
R220 10K
DM
TEST1
TEST2
WQ
R/W
GU
TLOK
VDD
GND
C254 1.5μF
R251 10K
R255
R256
R257
R258
47K×4
IC202
μPD7564CS-42
D203
D204
D205
D206
1SS133×4
R215
R214
R212
47K×3
FW203
FW204
LED
GND
VDD
OUT
R270 330
D270
SLH-56VC32
IC270
CX20106A
C270 0.022
R272 2.2K
C271 470P
R273 220K
C272 2.2μ/50V
R274 4.7
C273 1μ/50V
D271
PH302C
SW208
SW209
REPEAT
PROGRAM
ENN-049B-2
ENN-051A-2
ENN-049B-3
ENN-051A-3

Grundplatte
Main board
Platine de base

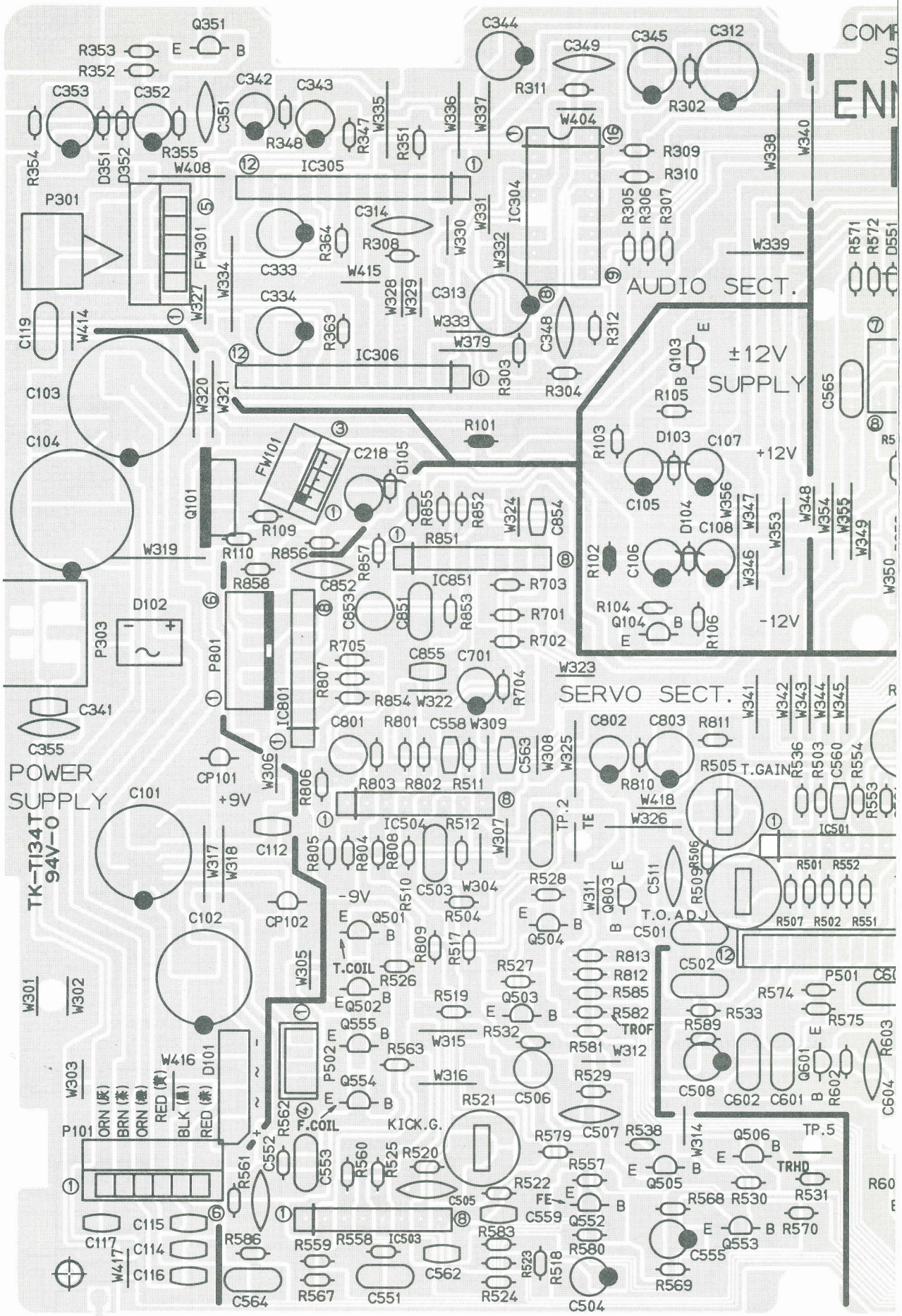

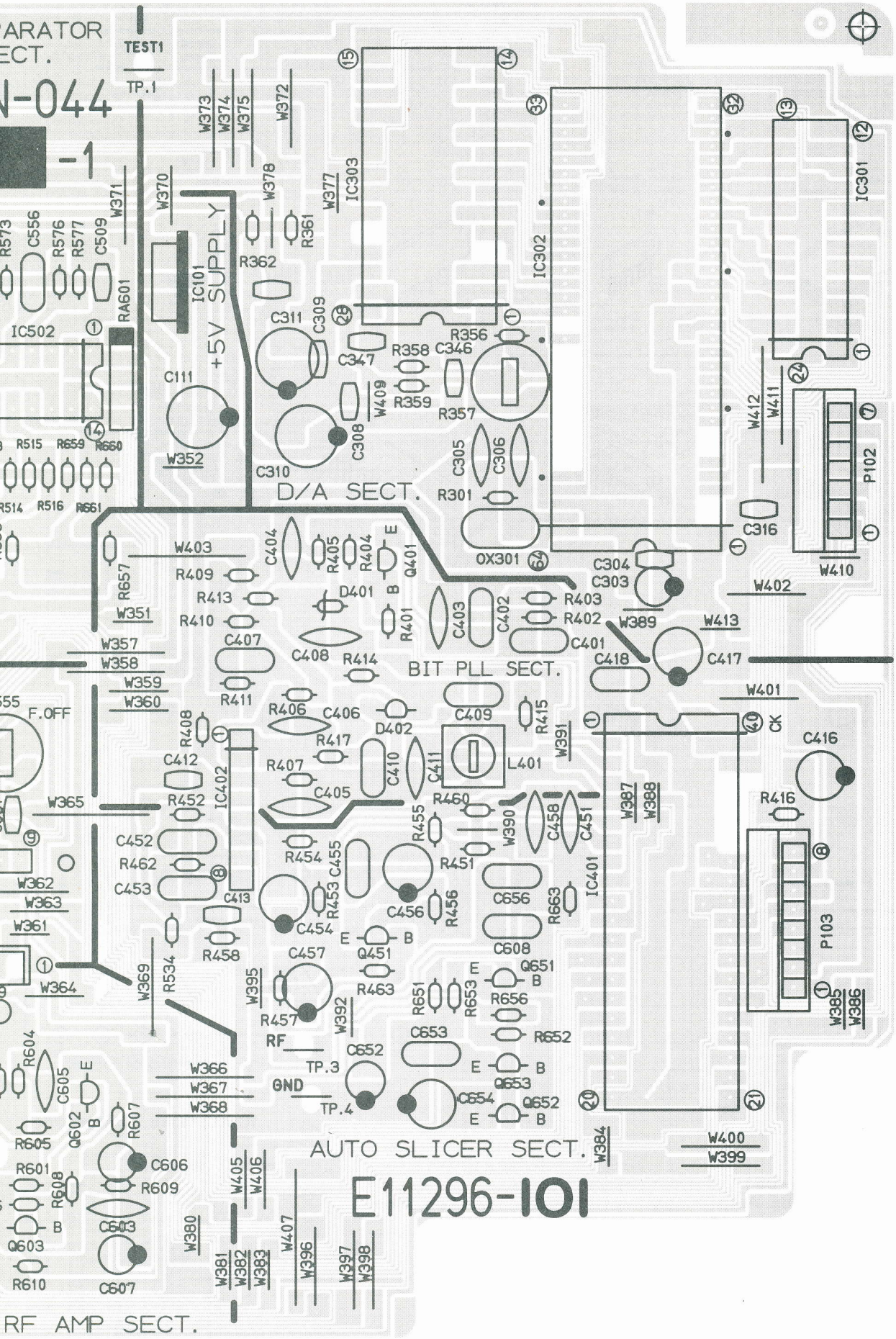
ARATOR
ECT.
N-044
-1
TEST1
TP.1
W373
W374
W375
W372
W370
W371
W378
W377
IC303
IC302
IC301
R573
C556
R576
R577
C509
RA601
IC101
+5V SUPPLY
R362
R361
IC502
C311
C309
C347
R358
C346
R356
C111
W409
R359
R357
W352
C308
C310
C305
C306
D/A SECT.
R301
R515
R659
R660
R514
R516
R661
W412
W411
P102
C316
W410
R657
W403
C404
R405
R404
E
Q401
OX301
C304
C303
W402
R409
R413
D401
B
R403
R410
W351
R401
C403
C402
R402
W389
W413
W357
W358
C407
C408
R414
C401
C418
C417
BIT PLL SECT.
W359
W360
R411
W401
F.OFF
R406
C406
D402
C409
R415
CK
C416
R408
R417
C412
C410
C411
L401
W391
R407
IC402
C405
R460
W387
W388
W365
R452
R455
W390
C458
C451
R416
C452
R462
R454
C455
R451
IC401
C453
C413
R453
C456
R456
C656
R663
P103
W362
W363
W361
C454
E
B
Q451
C608
R458
C457
R463
Q651
R534
W369
W364
W395
R651
R653
R656
R457
W392
RF
C653
R652
W385
W386
R604
C652
TP.3
E
B
W366
W367
W368
GND
Q653
C605
TP.4
C654
Q652
R605
Q602
R607
W384
W400
W399
AUTO SLICER SECT.
R601
C606
R608
R609
W405
W406
B
C603
W380
Q603
W407
R610
C607
W381
W382
W383
W396
W397
W398
RF AMP SECT.
E11296-101

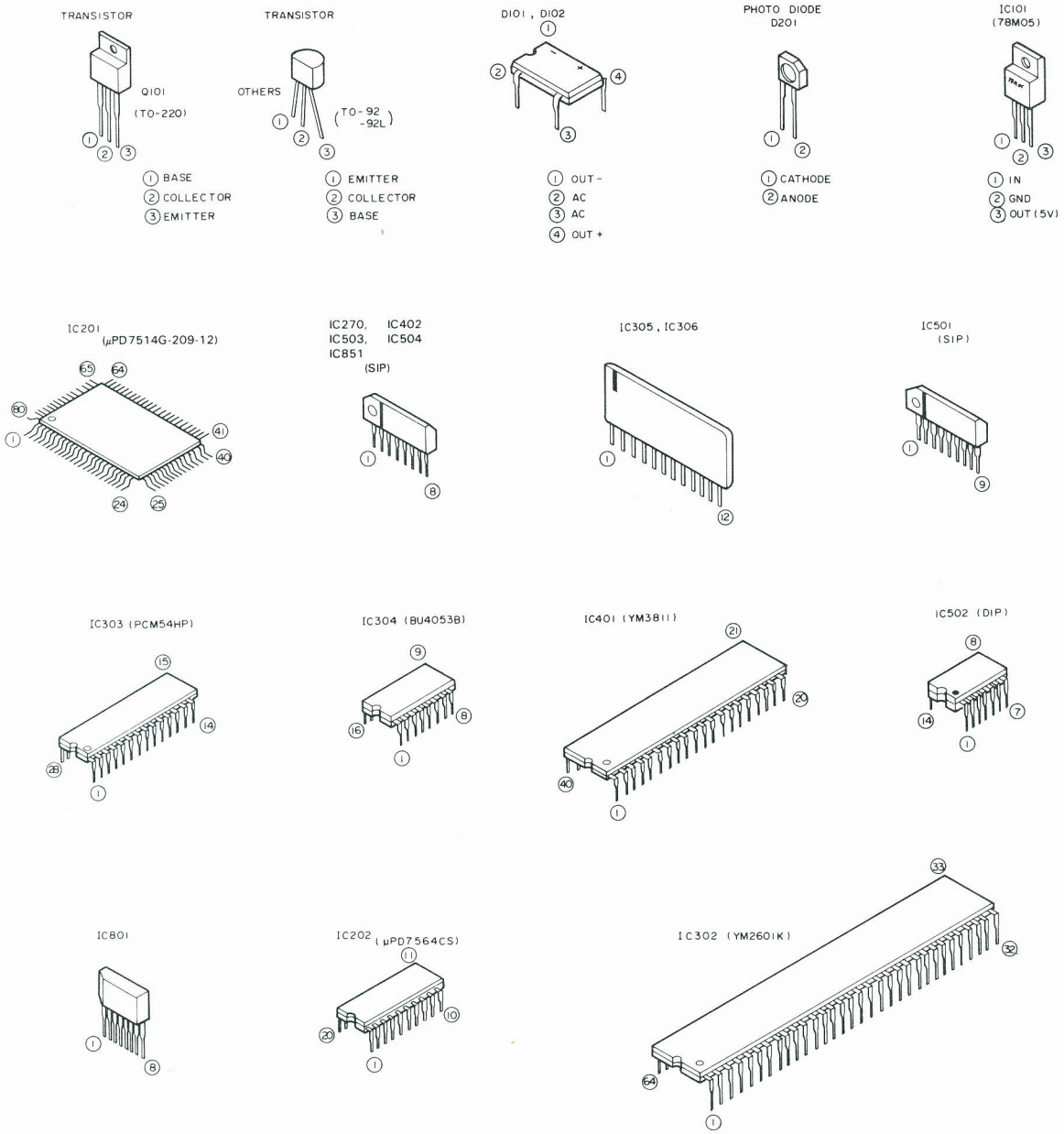

IC801 Power op. Amp.

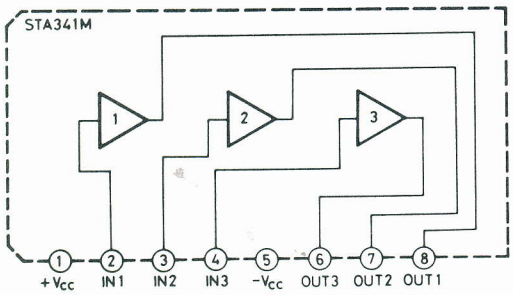

IC501 Dual op. Amp.

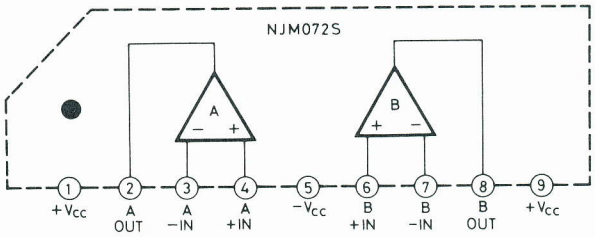

IC502 Quad. Comparator

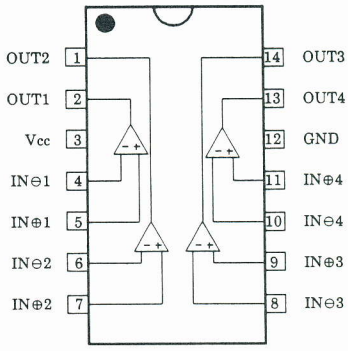

IC281/307/503/504/851 Dual op. Amp.

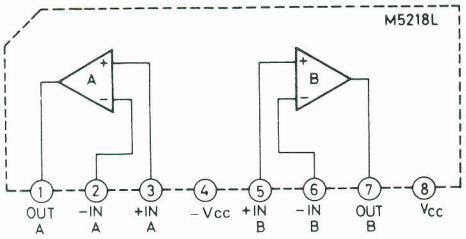

IC402 Dual op. Amp.

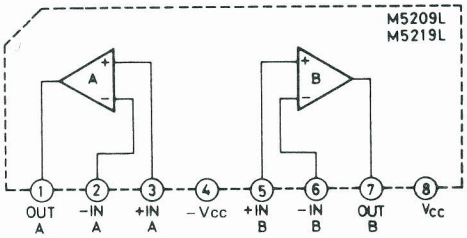

IC305/306 LPF

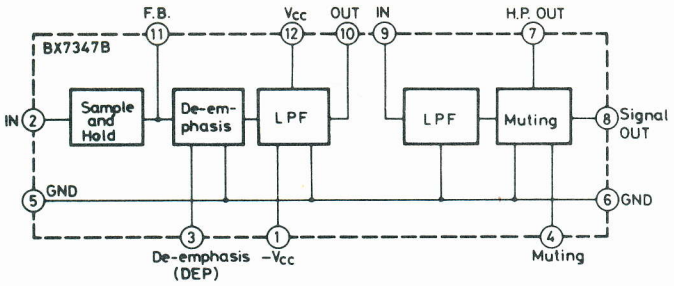

IC101 Voltage Regulator

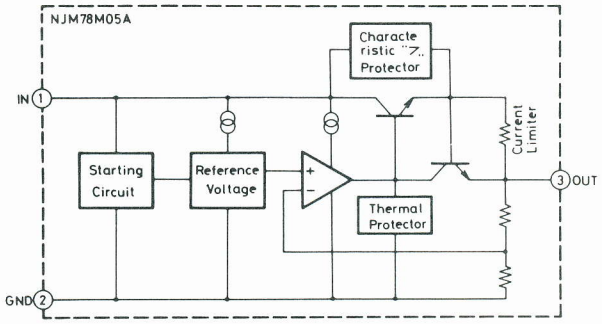

IC301 Static RAM

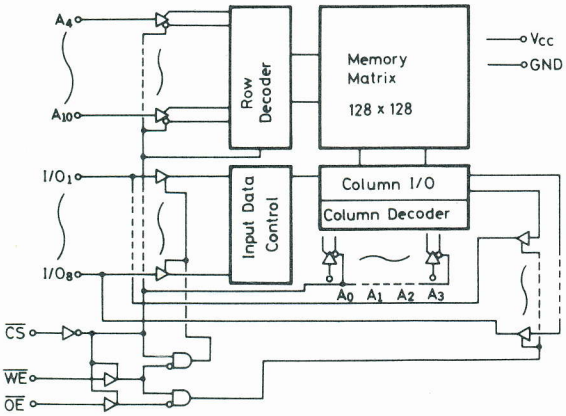

IC207 Remote Control Sensor

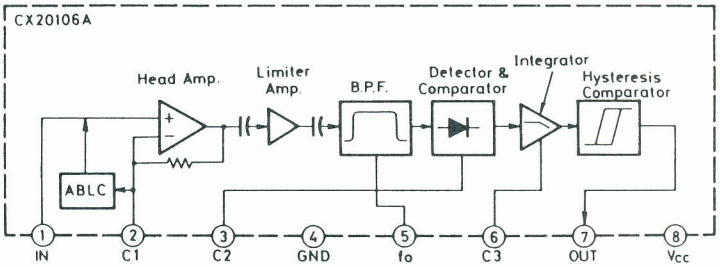

IC304 Analog. Switch Multiplexer

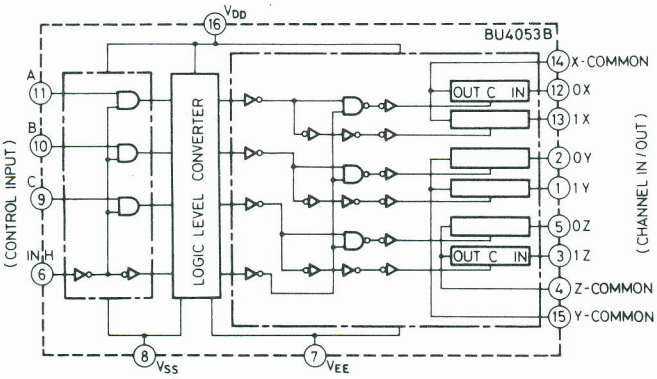

YM3811

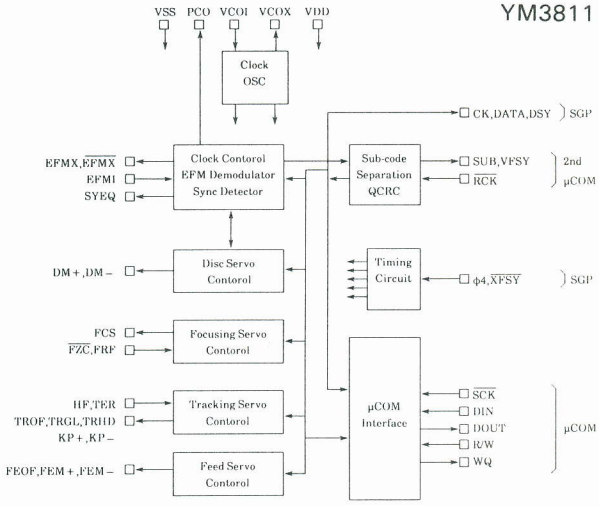

IC503 Digital Analogic Converter

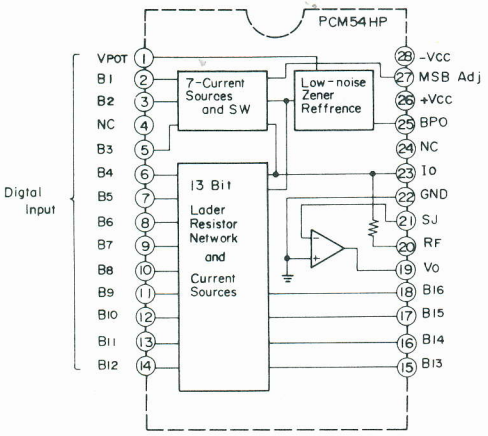

YM2601

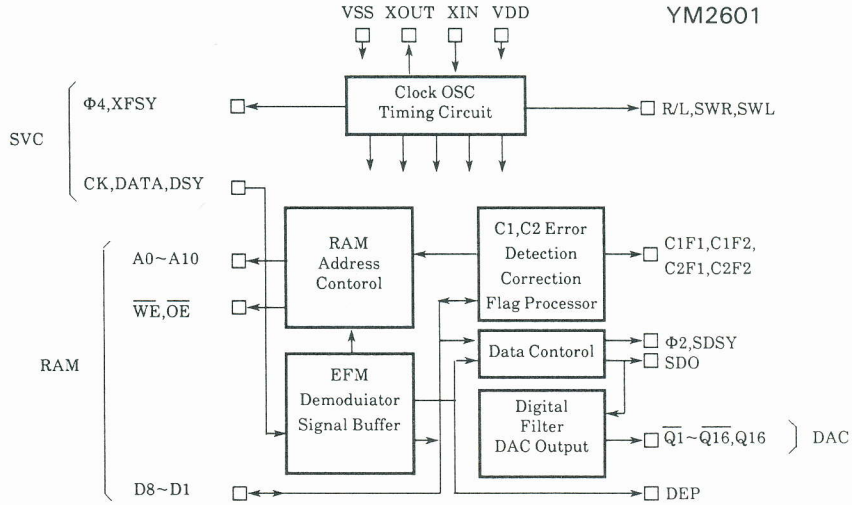

Important Waveforms

1. Eye pattern (RF signal)
TP3 (RF); standard eye pattern.

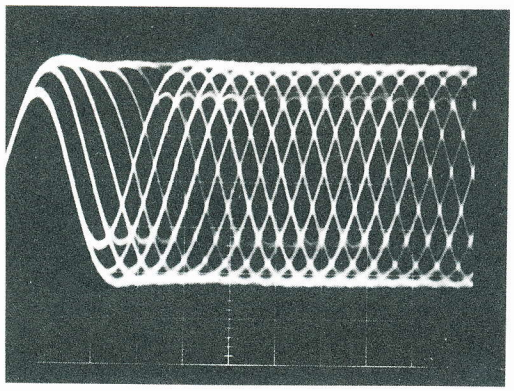

0.5 μs/div 0.5 V/div

2. Reset signal of microcomputer
Q204 collector

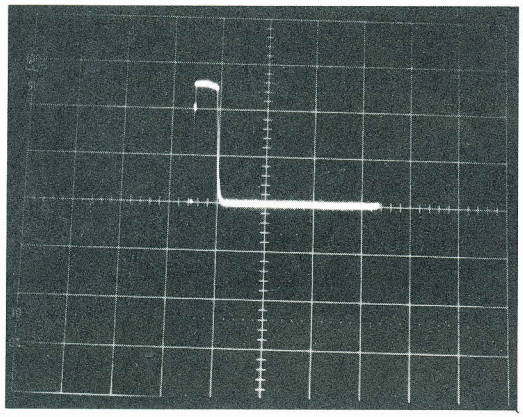

0.5 s/div 2 V/div

3. Focus signal during play
Q554 emitter; operates with period of about 0.2—1 ms.

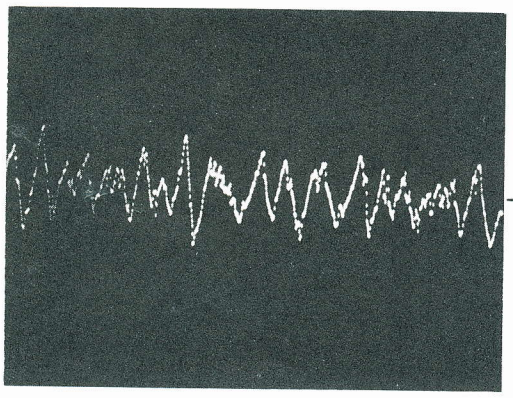

1 ms/div 0.5 V/div

4. Focus search voltage
Voltage across C555; the waveform lens is moved up and down by this voltage when the platter is loaded without a disc.

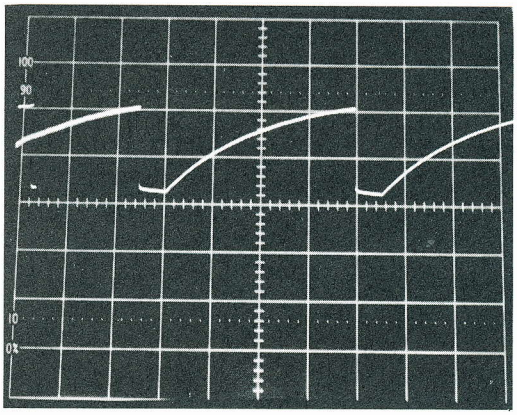

0.5 s/div 2 V/div

5. Pulse for focus search voltage
Pulse for focus search transmitted from IC401

IC401 Pin (12) FCS signal

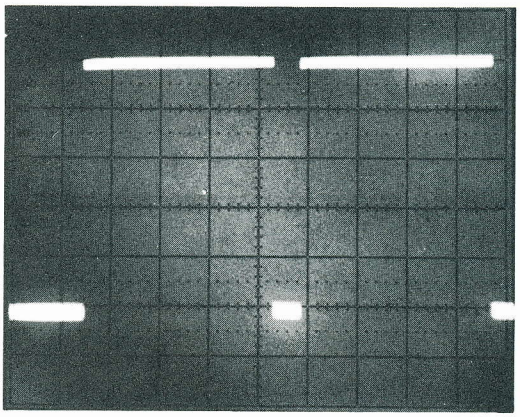

0.5 s/div 1 V/div

6. Focus zero-cross output
Pulse showing that focus output waveform has almost passed the zero point.

IC502 Pin (1) output

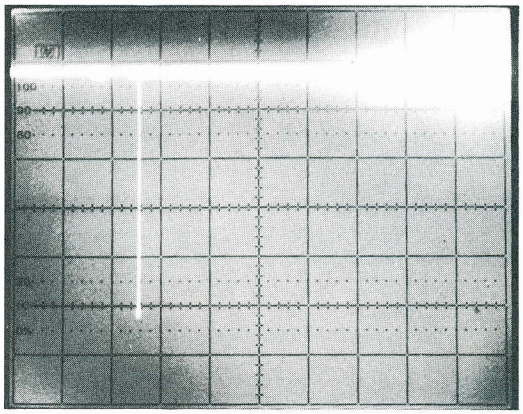

2 ms/div 1 V/div

7. Focus drive waveform

Waveform until focus is obtained, spindle motor starts to rotate and TOC is read.*

Q554 emitter; when focus has been finished and motor starts to rotate

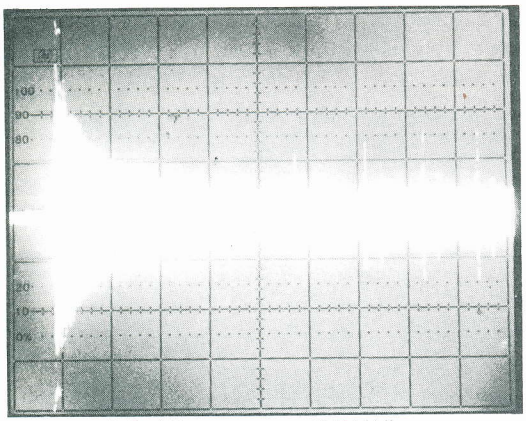

0.2 s/div 0.5 V/div

8. Drive waveform during focus search

Drive waveform of focus coil when the platter is loaded without a disc.

Q544 emitter; focus signal when no disc is loaded

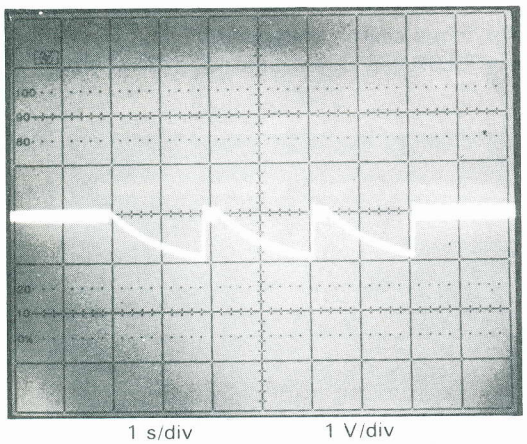

1 s/div 1 V/div

9.Waveform until TOC is read

Q554 emitter; until TOC has been read and spindle motor stops

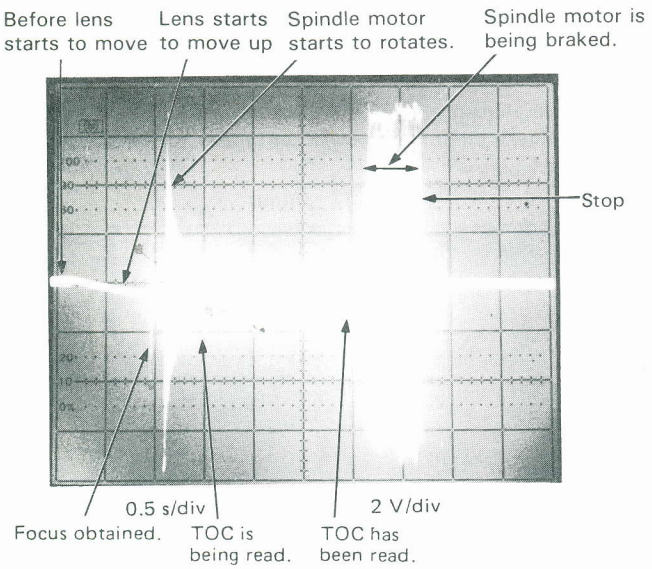

* **TOC** : Display words / Mots d'affichage / Anzeigewort

10. Tracking waveform during normal play

Q501 emitter

Wavevform during play

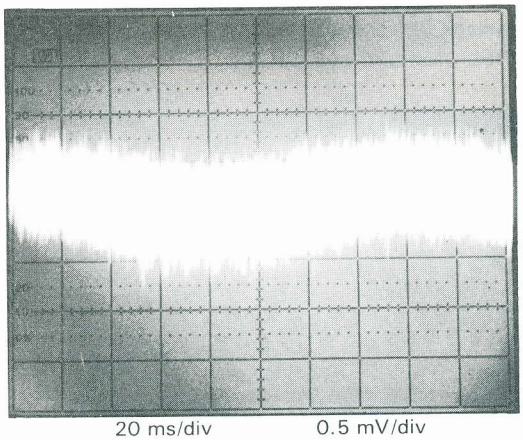

20 ms/div 0.5 mV/div

11. TP2 (TE) waveform of high speed search in forward direction

Output when track is jumped is visible

TP2 (TE); in case of transporting in high speed search ▶▶

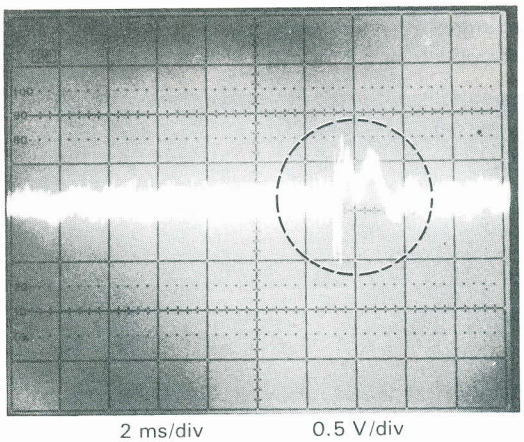

2 ms/div 0.5 V/div

12. TP2 (TE) waveform of high speed search in backward direction

The waveform the reverse of that in high speed search in forward direction is shown.

TP2 (TE); in case of returning by high speed search ◀◀

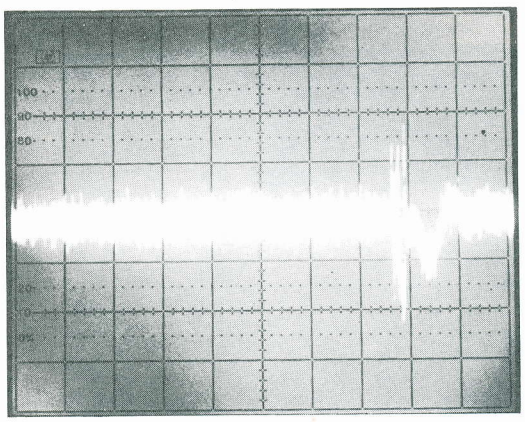

2 ms/div 0.5 V/div

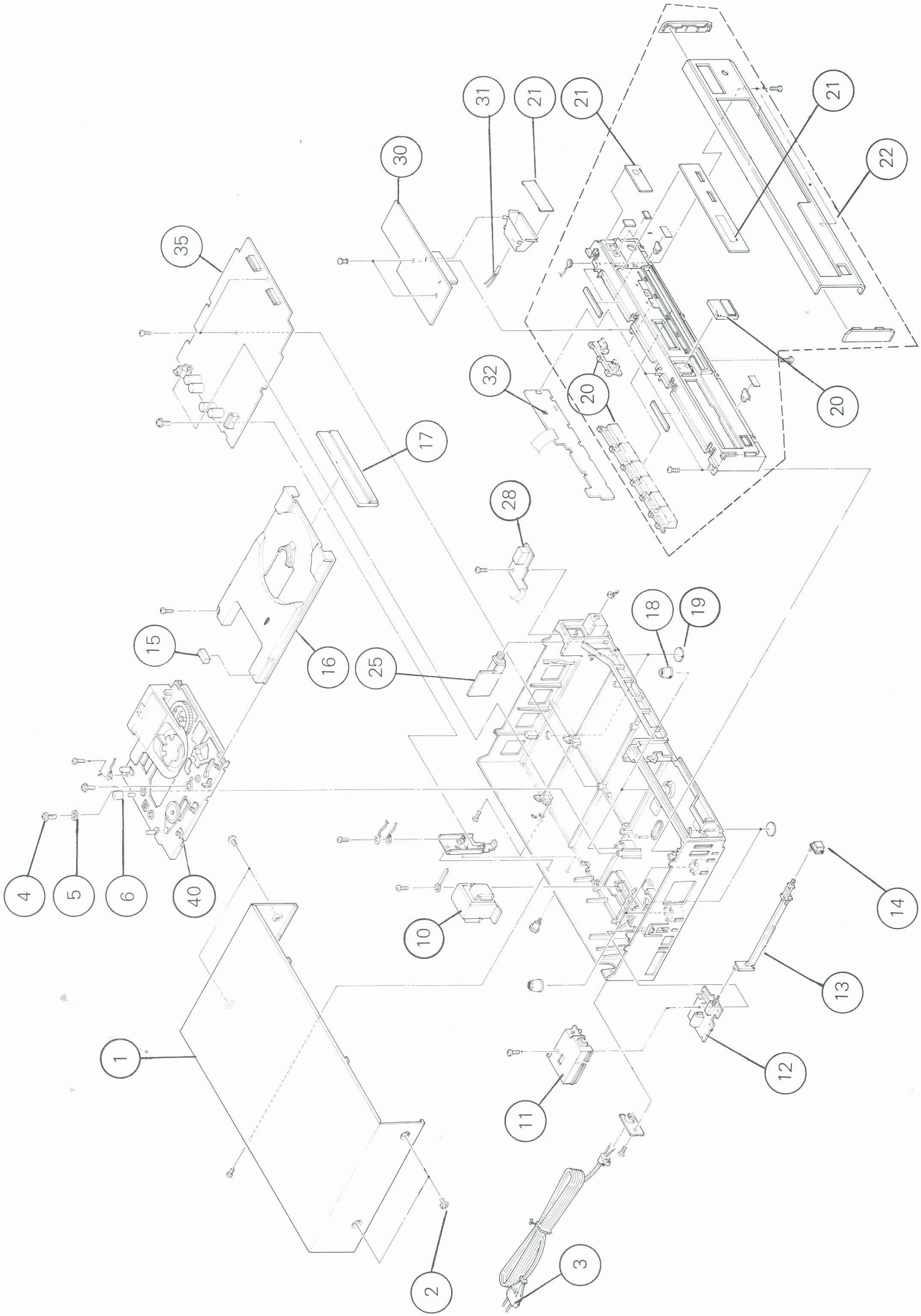
1
2
3
4
5
6
10
11
12
13
14
15
16
17
18
19
20
20
21
21
21
22
25
28
30
31
32
35
40

utput.

g
nt

ng
pment)

signal

18. L/R switching signal and deglitch signal of L
L deglitch signal (Pin 61) is input when switching signal (Pin 59) is at "L" level.

Waveform of IC302 Pins 59 and 61

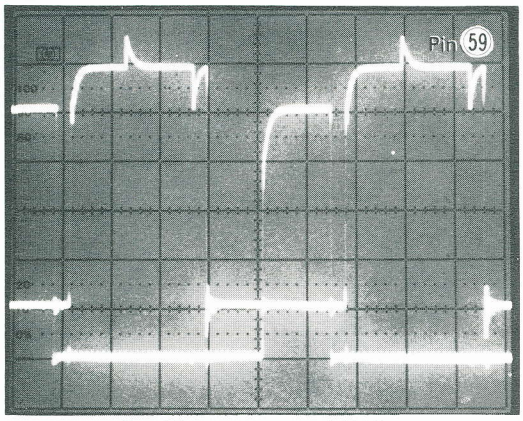

2 μs/div 1 V/div

19. AF signal switched after D/A
Waveform showing that R and L are output alternately.

R/L signal switched of IC303 Pins 19 and 20

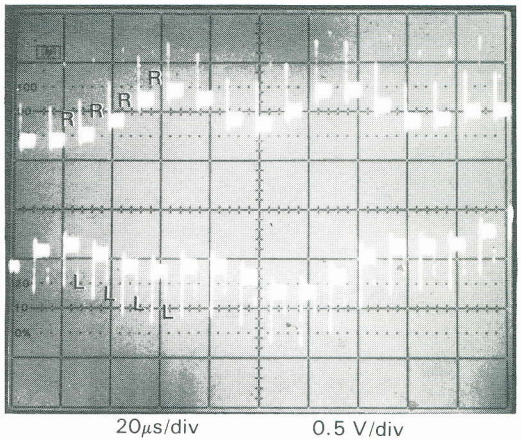

20μs/div 0.5 V/div

Note: Photos 17 and 18 are shifted by 1 V for better visibility.

A Output waveform of focus zero-cross
Minus pulse is generated when focus signal passes near zero.

IC502 Pin 1

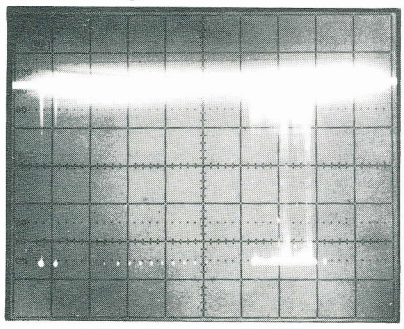

0.2 s/div 5 V/div

B Waveform when focus zero-cross is started to play
Focus zero-cross signal just before play stats; pulse width is about 10 ms.

IC502 Pin 1

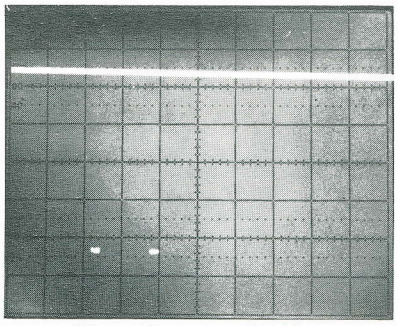

50 ms/div 5 V/div

C Focus signal when a loaded disc starts to be played
Strong signal is output when focus starts to be obtained but it becomes of small amplitude when it enters in servo loop.

IC503 Pin 1

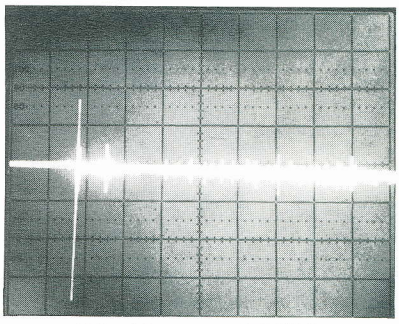

0.1 s/div 0.5 V/div

D Waveform when a disc is loaded
Shows until brake is operated after TOC has been read.

IC503 Pin 7

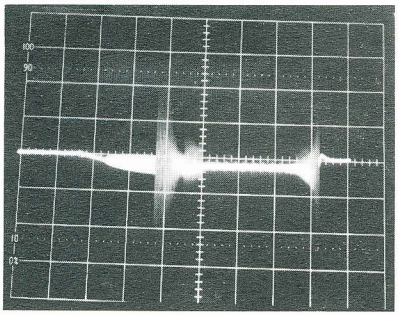

0.5 s/div 1 V/div

E Waveform when a disc is loaded
Shows until brake is operated after TOC has been read.

IC502 Pin 14

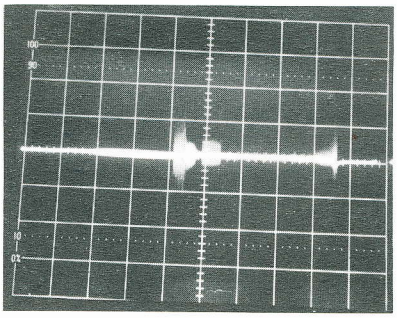

0.5 s/div 1 V/div

F Waveform when a disc is loaded
Shows until brake is operated after TOC has been read.

TP2 (TE)

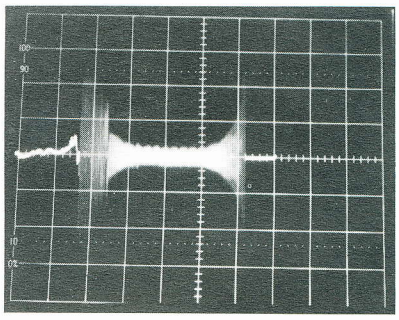

0.5 s/div 1 V/div

13. Drive waveform during high speed search
Output such as noise is output when track is crossed.

Q501 emitter; during high speed search

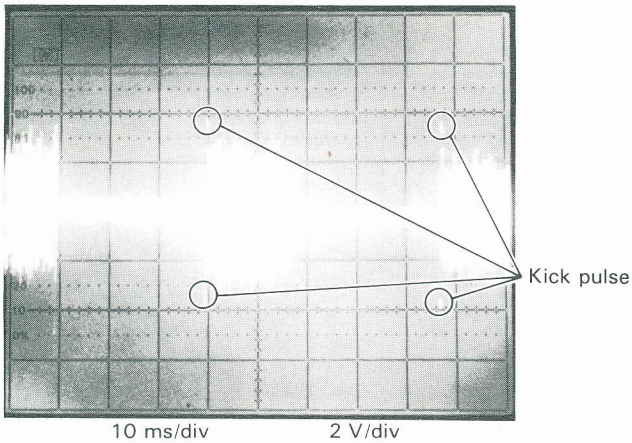

10 ms/div 2 V/div

14. Kick pulse when searching
When advancing the track, waveform below is output.

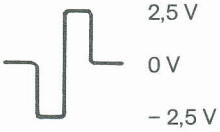

Q501 emitter; Kick pulse when ▶▶ is used.

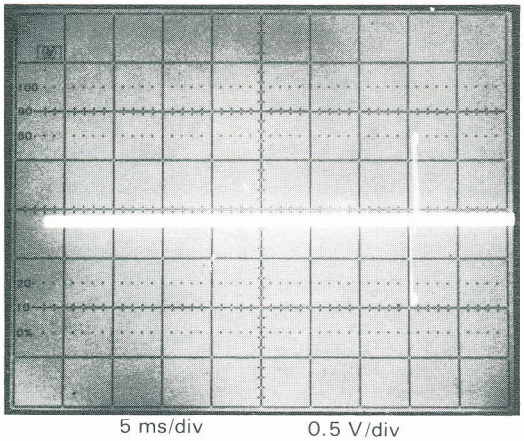

5 ms/div 0.5 V/div

Note: Insert the LPF shown below between the test point and the mesuring equipment.

15. Spindle motor drive waveform during play

IC801 Pin ⑧

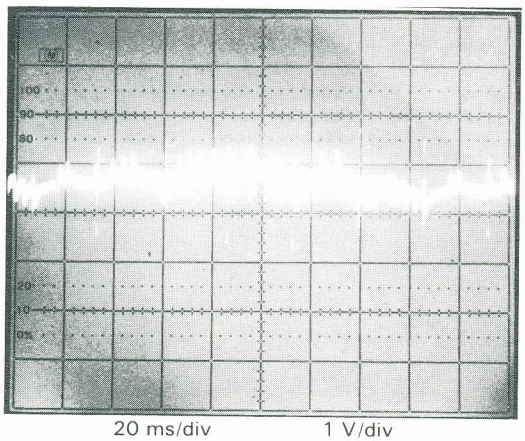

20 ms/div 1 V/div

16. Kick pulse when searching
When returning the track, waveform below is output.

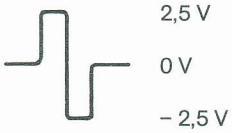

Q501 emitter; Kick pulse when ◀◀ is used.

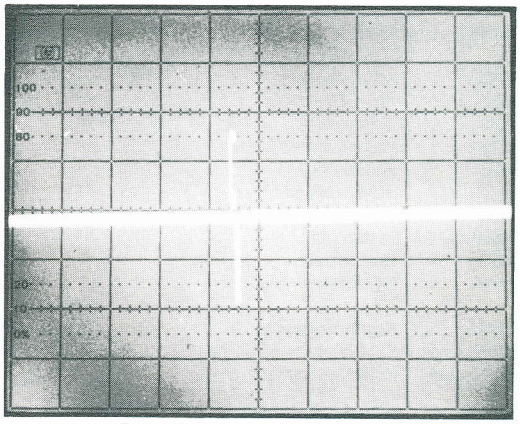

5 ms/div 0.5 V/div

LPF circuit

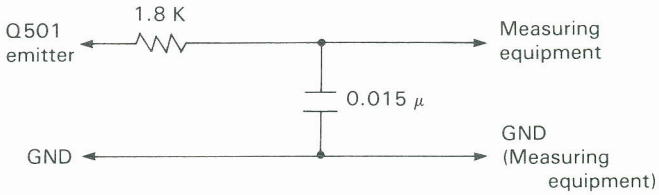

17. L/R switching signal and deglitch signal of R
R deglitch signal (Pin ⑥⓪) is input when switching signal (Pin ⑤⑨) is at "H" level.

Waveforms of IC302 Pins ⑤⑨ and ⑥⓪

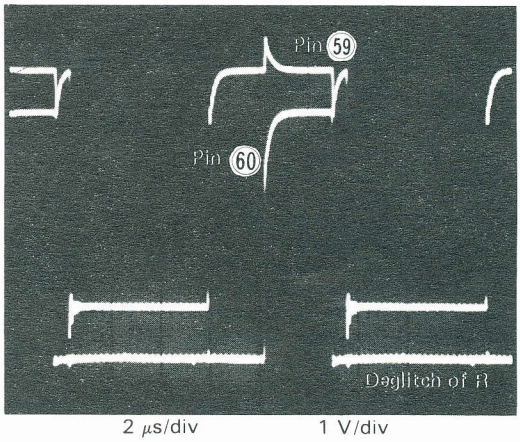

2 μs/div 1 V/div

rsatzteile · Replacement parts · Pièces détachées · CD 1040

Pos.	Art.-Nr.	Stck	Bezeichnung
1	281 523	1	Gehäuseblech
2	281 545	5	Schraube
3	243 750	1	Netzkabel
4	281 542	1	Schraube
5	281 543	1	Scheibe
6	281 544	1	Distanzrolle
10	281 477	1	Netztrafo
11	281 541	1	Abdeckung
12	281 540	1	**Netzplatte**
MA 1	281 476	1	Schalter
13	281 533	1	Schaltstange
14	281 535	1	Taste (Power)
15	281 538	1	Distanzstück
16	281 478	1	Plattenhalter
17	281 526	1	Abdeckung
18	281 537	4	Gummidämpfer
19	281 539	4	Fuß
20	281 923	1	Tastensatz
21	281 929	1	Blendensatz
22	281 473	1	Frontblende
25	281 474	1	**Kopfhörerplatte**
IC 281	274 955	1	IC M 5218 L
P 281	281 475	1	Kopfhörerbuchse
28	281 934	1	**IR-Empfängerplatte**
D 270	281 513	1	LED SLH 56 VC 32
D 271	281 514	1	LED PH 302 C
IC 270	281 512	1	IC CX 20106 A
30	281 935	1	**Anzeigeplatte**
31	281 472	1	Anzeigelampe
D 203	281 494	5	Diode 1 SS 133 HV
D 204	281 494	5	Diode 1 SS 133 HV
D 205	281 494	5	Diode 1 SS 133 HV
D 206	281 494	5	Diode 1 SS 133 HV
D 207	281 494	5	Diode 1 SS 133 HV
Q 204	281 505	1	Transistor 2 SA 933 S
R 204	281 920	1	Steller 4,7 kΩ
IC 201	281 510	1	IC UPD 7514 G
IC 202	281 511	1	IC UPD 7564
LC 201	281 509	1	Anzeige
OS 250	281 515	1	Keramikfilter 700 kHz
32	281 936	9	**Tastenplatte**
SW 201	281 516	9	Microschalter
bis			
SW 209	281 516	9	Microschalter
35	281 524	1	**Grundplatte**
D 101	281 491	1	Diode S1VB 20
D 102	281 492	1	Diode S1WB 20
D 103	281 493	2	Diode BZX 79 C 13
D 104	281 493	2	Diode BZX 79 C 13
D 105	266 950	1	Diode RD 12 EB
D 351	281 494	3	Diode 1 SS 133 HV
D 352	281 494	2	Diode 1 SS 133 HV
D 401	281 495	1	Diode MTZ 5,1 B
D 402	281 496	1	Diode SVC 321-AWAA2
D 701	281 494	3	Diode 1 SS 133 HV
L 401	281 479	1	Spule
P 301	281 922	1	Cinchbuchse
Q 101	281 502	1	Transistor 2 SD 1505 F
Q 103	269 095	1	Transistor 2 SC 2060 Q
Q 104	281 504	1	Transistor 2 SA 934 R
Q 351	281 505	4	Transistor 2 SA 933 S
Q 401	274 774	7	Transistor 2 SD 1302 T
Q 451	274 774	7	Transistor 2 SD 1302 T
Q 501	281 506	2	Transistor 2 SD 400 E
Q 502	281 507	2	Transistor 2 SB 544 E
Q 503	274 774	7	Transistor 2 SD 1302 T
Q 504	274 774	7	Transistor 2 SD 1302 T

Pos.	Art.-Nr.	Stck	Bezeichnung
Q 506	281 505	4	Transistor 2 SA 933 S
Q 552	274 774	7	Transistor 2 SD 1302 T
Q 553	281 505	4	Transistor 2 SA 933 S
Q 554	281 506	2	Transistor 2 SD 400 E
Q 555	281 507	2	Transistor 2 SB 544 E
Q 601	273 842	1	Transistor 2 SC 535 C
Q 602	247 645	1	Transistor 2 SC 458 D
Q 603	281 508	1	Transistor 2 SA 1029 C
Q 651	281 505	4	Transistor 2 SA 933 S
Q 652	269 146	2	Transistor 2 SC 1740 S
Q 653	269 146	2	Transistor 2 SC 1740 S
Q 803	274 774	7	Transistor 2 SD 1302 T
R 101	281 501	2	Sicherungswiderstand 10/5%/1W
R 102	281 501	2	Sicherungswiderstand 10/5%/1W
R 505	281 920	2	Steller 4,7 kΩ
R 509	281 498	1	Steller 220 kΩ
R 521	281 920	2	Steller 4,7 kΩ
R 555	281 499	1	Steller 100 kΩ
CP 101	281 480	2	Schutzschaltung ICP-N20T1
CP 102	281 480	2	Schutzschaltung ICP-N20T1
IC 101	271 075	1	IC NJM 78 M 05 A
IC 301	281 481	1	IC HM 6116 ASP-20
IC 302	281 482	1	IC YM 2601 K
IC 303	281 483	1	IC PCM 54 HP
IC 304	281 484	1	IC BU 4053 B
IC 305	281 485	2	IC BX 7347 C
IC 306	281 485	2	IC BX 7347 C
IC 401	281 486	1	IC YM 3811
IC 402	281 487	1	IC M 5209 L
IC 501	281 488	1	IC NJM 072 S
IC 502	281 489	1	IC NJM 2901 N
IC 503	274 955	3	IC M 5218 L
IC 504	274 955	3	IC M 5218 L
IC 801	281 490	1	IC STA 341 M
IC 851	274 955	3	IC M 5218 L
QS 301	281 500	1	Quarz 8,6436 MHz
RA 601	281 497	1	Widerstandsnetzwerk 4×4,7
40	281 517	1	**CD-Laufwerk**
41	281 518	1	Andruckarm
42	281 551	1	Plattenteller
43	281 549	2	Riemen
44	281 503	1	Antriebsrolle
45	281 918	1	Antriebsrad
46	281 916	1	Achse
47	281 919	1	Zwischenrad
48	281 522	1	Motor
49	281 548	1	Schalter
50	281 521	1	Discmotor
51	281 547	1	Abdeckung
52	281 905	2	Mutter
53	281 911	1	Haltewinkel
54	281 914	1	Achse
55	281 932	1	CD-Pickup
57	281 546	1	Zwischenrad
58	281 912	1	Pickup Support
59	281 917	1	Mutter
60	281 915	1	Feder
61	281 520	1	Schalter
65	281 907	1	Zwischenrad
66	281 906	1	Schraube
67	281 904	1	Hauptrad
68	281 913	1	Feder
69	281 550	1	Antriebsrad
70	281 908	1	Antriebsritzel
72	281 909	1	Zwischenrad
73	281 910	1	Hebel
74	281 519	1	Motor (Schlitten)
80	281 921	1	**RC 1040 Fernbedienung**
	226 817	1	Cinchkabel
	280 881	1	Bedienungsanleitung CD 1040
	281 933	1	Verpackung kpl.

Änderungen vorbehalten! Subject to change! Sous réserve de modification!

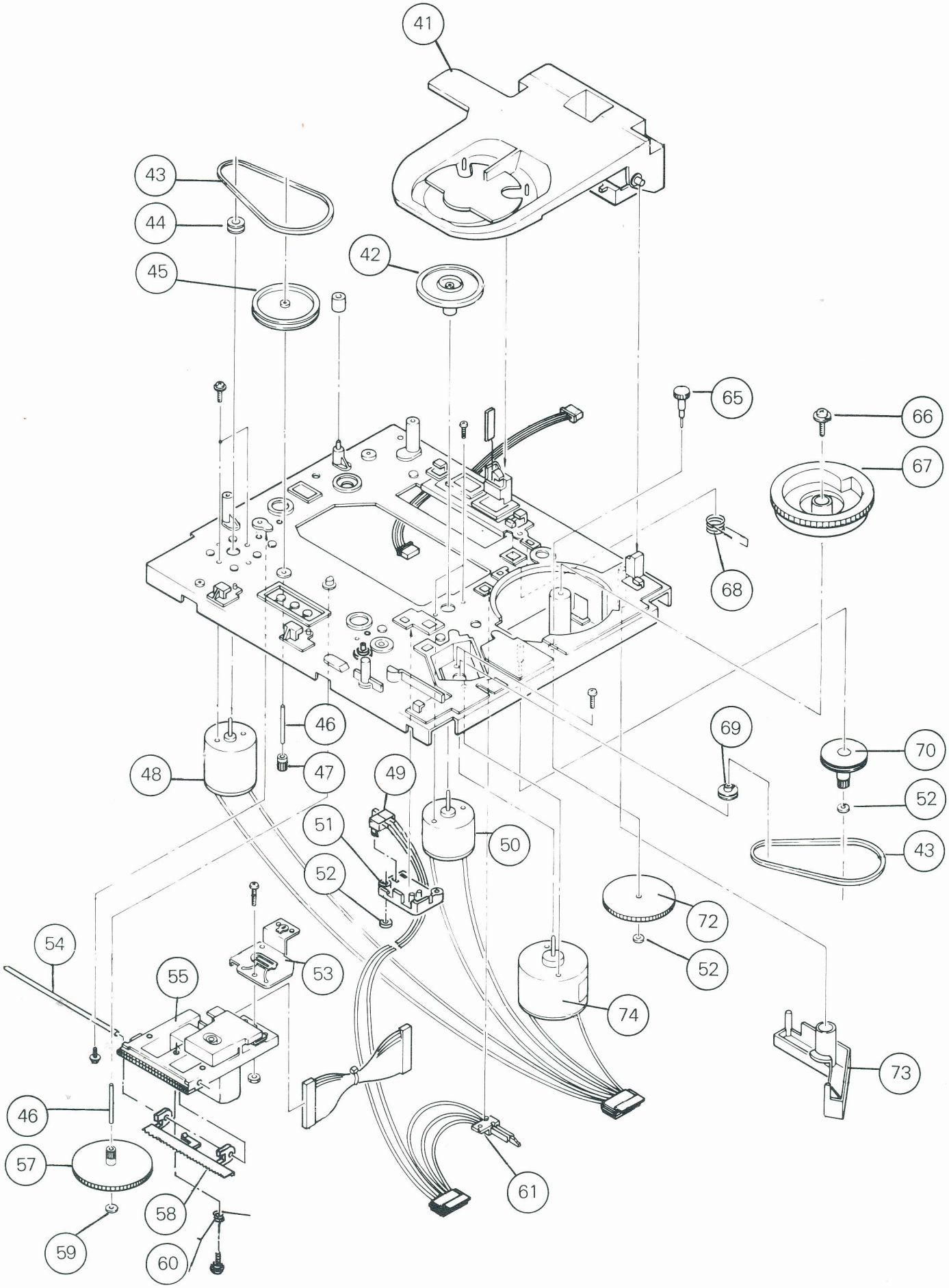
41
43
44
45
42
65
66
67
68
46
47
48
49
69
70
52
51
50
43
52
72
52
54
55
53
74
73
46
57
58
61
59
60